Fast EtherHub 3500 System
Installation and User's Guide

♦ Fast EtherHub-12i
♦ Fast EtherHub-12mi SNMP

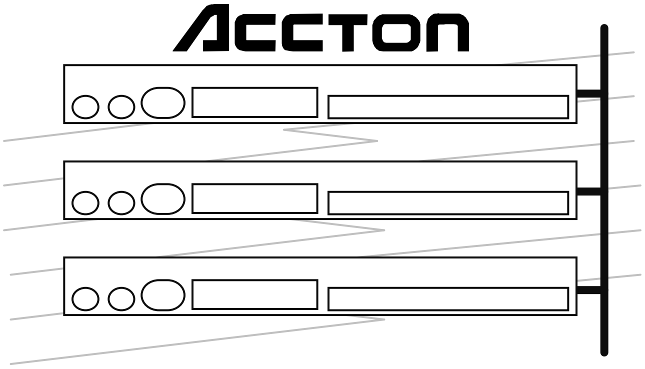

Installation and User's Guide

Fast EtherHub 3500 System

Intelligent
Fast Ethernet Stackable Hub
with **12** 100BASE-TX Ports;
including SNMP Management Support

ACCTON

Copyright (c) 1996 by Accton Technology Corporation. All rights reserved.

No part of this document may be copied or reproduced in any form or by any means without the prior written consent of Accton Technology Corporation.

Accton makes no warranties with respect to this documentation and disclaims any implied warranties of merchantability, quality, or fitness for any particular purpose. The information in this document is subject to change without notice. Accton reserves the right to make revisions to this publication without obligation to notify any person or entity of any such changes.

Before operating this product, please review the statements on electomagnetic emission interference and safety compliance in Appendix D.

Accton

International Headquarters
No. 1 Creation Road III,
Science-based Industrial Park
Hsinchu 300, Taiwan, R.O.C.
Phone: 886-3-5770-270
FAX: 886-3-5770-267
BBS: 886-3-5770-654
Internet: support@accton.com.tw

USA Headquarters
1962 Zanker Road
San Jose, CA 95112
Phone: 408-452-8900
FAX: 408-452-8988
BBS: 408-452-8828
FAST FAX: 408-452-8811

Accton, EtherHub, SmartWatch, SmartExtender and AccView and are trademarks or registered trademarks of Accton Technology Corporation. Other trademarks or brand names mentioned herein are trademarks or registered trademarks of their respective companies.

EH3512I-TX
EH3512M-TX
E1296-R01
150136-101

Package Contents

Carefully unpack the contents of the package and verify them against the checklist given below. This checklist applies to all the Fast EtherHub 3500 Series models unless otherwise specified.

Package Checklist

☑ **Fast EtherHub-12i**
Intelligent Fast Ethernet Stackable Hub with 12 100BASE-TX Ports
(Model No. EH3512I-TX)

or **Fast EtherHub-12mi SNMP**
Intelligent Fast Ethernet Stackable Hub with 12 100BASE-TX Ports;
including SNMP Managment Support
(Model No. EH3512M-TX)

☑ Two mounting brackets

☑ Four rubber foot pads

☑ One AC power cord

☑ One 20 cm FlexBus 3500 stack cable

☑ Installation manual

☑ Owner registration card

Please inform your dealer immediately should there be any wrong, missing, or damaged parts.

If possible, retain the carton, including the original packing materials. Use them again to repack the unit in case there is a need to return it for repair.

To qualify for product updates and product warranty registration, fill in the **Owner Registration Card** and return it to Accton Technology Corporation.

Quick Installation

Accton's Fast EtherHub 3500 models each contain 12 Fast Ethernet (100BASE-TX) RJ-45 ports, one MDI daisy-chain port, and one slot for an optional connection using 100BASE-TX (10BASE-T), 100BASE-T4 or 100BASE-FX.

The smart design built into the front display panel and configure options provide a friendly interface that simplifies installation and network troubleshooting. If you are already familiar with basic network operations, you should be able to install this hub as described below:

1. Unpack the Fast EtherHub 3500 unit.

2. Find a location close to the network devices you need to connect, and within easy reach of an electrical outlet.

These hubs are suitable for desktop or rack mounting

3. Mount the hub on a desktop or any other flat surface. If you are installing multiple hubs, you can stack them on top of each other (after attaching the foot pads), or install them in a standard EIA 19-inch rack.

Attach PCs to the station ports

4. Connect any devices that use a standard network interface to the RJ-45 (MDI-X) station ports (e.g., a workstation, server or router). Use 100Ω Category 5 unshielded twisted-pair (UTP) or 100Ω shielded twisted-pair (STP) cable. Also be sure that the length of any twisted-pair connection does not exceed 100 meters. (Refer to Chapter 2 for a more detailed description of calculating the maximum cable length permitted between two end nodes.)

Attach each hub in the stack with FlexBus 3500 stack cable

5. If you are stacking multiple hubs, connect the FlexBus 3500 stack cable between the "Out" and "In" backplane ports on adjacent hubs. Run a simple chain starting at the Out port on the top hub in the stack, and ending at the In port on the bottom hub in the stack. No more than 6 hubs can be connected via the backplane bus.

Attach each hub to one of the backplane segments

6. Connect each hub to one of the 3 Fast Ethernet segments embedded in the backplane bus using either on-board configuration (Chapter 4) or optional network management software (e.g., AccView/Open). You can leave a hub isolated from the backplane if required for your network environment (e.g., to restrict network access for the attached user group). However, you should be careful to structure your network connections so that nodes which communicate frequently are located in the same segment. (Factory default is Segment 1.)

Use the SmartExtender Module to interconnect different segments in the stack

7. Bridge the different backplane segments in the Fast Ethernet 3500 stack by running a connection from the optional 100BASE-TX extender module on this hub to any station port on another hub in the stack that has been assigned to a different segment. Remember that devices connected to the switching port exist in a separate segment (and unless also connected to the FlexBus management channel) cannot be controlled by a management agent in the stack. When connecting a hub to the expansion port, the maximum cable length is 100 meters.

Or interconnect the stack's segments by attaching the daisy-chain port to a switch, or the station ports to a router

8. If you do not have any available SmartExtender Modules, the different segments in a Fast EtherHub 3500 stack can also be combined into an interconnected network by running a cable from the hubs' daisy-chain ports (i.e., using port 12MDI on hubs attached to the different segments) to a network interconnection device such a switch; or by running a cable from the hubs' station ports (i.e., using ports on hubs attached to different segments) to a router.

Attach to the extended network via the daisy-chain port

9. You can also attach the overall stack to a network interconnection device via the daisy-chain port (when connecting to a switch) or via a station port (when connecting to a router). Run straight-through twisted-pair cable from the hub to the other device. When attaching to a switch, run cable from the MDI daisy-chain port on this hub to any (MDI-X) station port on the switch (or vice versa).

Note: When using the 12MDI daisy-chain port, remember that port 12X cannot be used.

Or attach to the extended network via the SmartExtender Module

The SmartExtender Module can be used to attach to another network device that uses a different media type

10. If an optional SmartExtender Module is installed in the expansion port, it can be used to make a bridged connection from this hub to another network device using 100BASE-TX (10BASE-T), 100BASE-T4 or 100BASE-FX media types. When connecting a node to the expansion port, the maximum cable length is 100 meters for twisted-pair cable, and 2 kilometers for fiber. (Refer to Chapter 2 for a more detailed description of calculating the maximum length permitted for fiber optic cable.)

Attach the SmartExtender Module to a hub, switch, bridge or router

You can use the extender module to bridge this hub to another Ethernet or Fast Ethernet hub or stack; or to attach it to a network interconnection device, such as a switch, bridge or router. However, when using the expansion port to cascade to other networking devices outside the stack, note that the maximum cascade length should be limited to 7 devices.

Transmission speed is automatically set for any connection made to the SmartExtender Module

For integrating legacy networks, the 100BASE-TX extender module provides for connection via either 100BASE-TX or 10BASE-T. All 100BASE entender modules use auto-sensing to set the transmission speed at 10 or 100 Mbps. In other words, this module can correctly set the transmission speed for the attached device, even if it does not support auto-negotiation.

Transmission mode automatically configured for the connected device only if it supports auto-negotiation

The extender modules, except for 100BASE-T4, support both half-duplex and full-duplex communications. However, for this hub to correctly set the transmission mode, the attached device must also support auto-negotiation. If auto-negotiation fails, the transmission mode defaults to half duplex. If this setting is not suitable, then the transmission mode must be manually configured via on-board configuration (Chapter 4) or optional network management software (e.g., AccView/Open).

Use half duplex for a shared collision domain

To reactivate auto-negotiation, just unplug a connection from the port on the hub and plug it in again. Remember that full-duplex mode can only be used for a dedicated link, such as that provided by the SmartExtender Module. When connecting to a shared collision domain (i.e., another hub) set the transmission mode for half duplex.

Difference in connecting to the extended network via the daisy-chain port or SmartExtenter Module

The Fast EtherHub 3500 stack can be connected to a larger network using any device such as a switch, bridge or router. Depending on your network configuration, you may attain better performance by making a direct connection from the daisy-chain port (or a station port) on this hub to an interconnection device. Making a connection from an extender module may introduce slightly more delay.

Check your connections

11. Verify network communications by ensuring that -

- you have made all the necessary connections
- you can access any connected resources
- the hub's indicators are functioning properly

If you encounter any problems in installing the Fast EtherHub 3500 system, refer to Chapter 2 for a detailed description of installation procedures, or to Appendix A for help in troubleshooting.

About this Guide

This guide is designed for the experienced network installer. It describes how to install and operate Accton's Fast EtherHub 3500 system. After reading this manual, you should be able to use the front display panel and configure options to manage all your network connections.

This manual covers the following topics:

Chapter 1 - **Product Overview**
Brief description of Fast Ethernet, followed by a description of this hub and a summary of its important features and specifications.

Chapter 2 - **Installing the System**
Installing a Fast EtherHub 3500 and making basic network connections. Also includes a description of significant components on the hub including ports and indicators.

Chapter 3 - **Setting up Network Connections**
Shows sample network configurations for a local area network.

Chapter 4 - **Configuring the System**
Describes how to manage the system via the on-board configuration program.

Chapter 5 - **Hardware Reference**
Detailed description of indicator panel and ports.

Appendices - Troubleshooting, cable assignments, and product specifications.

Contents

Chapter 1: Product Overview 1-1

Introduction to Fast Ethernet 1-1
Brief Description of the Fast EtherHub 3500 System 1-1
Distinguishing Factors of Fast EtherHub 3500 System 1-5
Basic Features of Fast EtherHub 3500 System 1-6
Data Switching with the SmartExtender Modules 1-9
    Switching Technology 1-9
    Configuration Options for the SmartExtender Modules 1-9
    Switching Methods 1-10

Chapter 2: Installing the System 2-1

Pre-Installation Requirements 2-1
Hardware Installation 2-2
    Stacking Hubs without a Rack 2-2
    Mounting Hubs in a Rack 2-3
    Connecting the Hub System 2-4
        Making a Connection via an MDI-X Station Port 2-4
        Connecting to the Stack’s Backplane 2-5
        Making a Connection via the MDI Daisy-Chain Port 2-6
        Connecting to a SmartExtender Module 2-6
        Installing a Backup Power Supply 2-11
    Powering on the Hub 2-12
        Diagnostic Tests 2-12
    Hot Remove 2-13
    Configuring a Manageable Stack 2-14
        Installing an SNMP Backup Agent 2-14
Verifying Port Status 2-15
    Verifying System Operation 2-15

Chapter 3: Setting up Network Connections 3-1

Special Architecture Used for the Fast EtherHub 3500 Stack 3-1
    Multi-Segment Architecture 3-1
    FlexBus Management Link 3-2
    Hub ID Setting 3-2
    Using Management Agents 3-2
    Port Backup Function 3-4
    Security Features 3-4
Sample Network Configurations 3-5
    Attaching the Stack to One Segment 3-5
    Attaching the Stack to Multiple Segments 3-6
    Isolating Specific Hub Connections 3-7
    Isolating Each Hub 3-8
    Extending the Network with Alternate Connections 3-9
    Linking the Stack to a Management Station 3-10
    Interconnecting the Segments 3-11
    Connecting Remote Stacks 3-12
    Operating in the Novell NetWare IPX Environment 3-13
    Operating in the TCP/IP Environment 3-14
    Connecting to the Network Backbone 3-15

Chapter 4: Configuring the System 4-1

Making the Connections Required for System Configuration 4-1
    Direct Connection 4-2
    Network Connection 4-2
        Local In-Band Telnet Connection 4-3
        Local In-Band Network Connection 4-3
    Remote Connection 4-4
        Configuring the Fast EtherHub Site 4-4
        Configuring the Remote Site 4-4
        Remote Configuration Methods 4-4
Accessing the Configuration Management Program 4-5
    Configuring Your System with the On-board Program 4-5
Using the Fast EtherHub 3500 System Configuration Program 4-7
    System Configuration Program for the Fast EtherHub-12i 4-8
        Configuring the SmartExtender Port 4-9

System Configuration Program for the 12mi and Stack 4-11
- Exiting the Configuration Program 4-12
- Restarting the Agent 4-13
- Displaying System Information 4-14
- Configuring the SNMP Agent 4-15
- Configuring SNMP Communities 4-16
- Configuring IP Trap Managers 4-17
- Configuring IPX Trap Managers 4-18
- Changing the Segment Configuration 4-19
- Configuring Hub Parameters 4-21
- Configuring Port Parameters 4-25
- Defining Backup Ports 4-29
- Port Intrusion Control 4-30
- Downloading System Software via a TFTP Server 4-32
- Xmodem Download 4-34
- Changing User Passwords 4-35
- Console Lockout 4-36
- Segment Statistics 4-37
- Hub Statistics 4-38
- Port Statistics 4-39

Chapter 5: Hardware Reference 5-1

Indicator Panel 5-2
- Power Indicator 5-2
- SmartExtender Module Indicator 5-2
- Interhub 5-3
- SNMP 5-4
- Segment Indicators 5-4
- Management Agent Indicators 5-5
- Hub ID Indicator 5-5
- Serial 5-6
- Terminator 5-7
- Isolation 5-7
- Utilization Indicators 5-7
- Collision Indicators 5-8
- Port Status Indicators 5-10
- Diagnostic Test Indicators 5-11

Network Connections 5-13
Station Ports 5-13
Daisy-Chain Port 5-13
Serial Port 5-14
Rear Panel Components 5-15
Power Supply Modules 5-15
FlexBus Ports 5-16
In 5-16
Out 5-16

Appendix A: Troubleshooting A-1

Diagnosing Hub Indicators A-1
System Diagnostics A-2
Power and Cooling Problems A-2
Installation A-2
Physical Configuration A-4
System Integrity A-4

Appendix B: Pin Assignments B-1

RJ-45 Port B-1
DB9 Serial Port Pin Description B-2
Hub's 9-Pin Serial Port to PC's 9-Pin COM Port B-3
Hub's 9-Pin Serial Port to PC's 25-Pin DTE Port B-4
Hub's 9-Pin Serial Port to Modem's 25-Pin DCE Port B-5

Appendix C: Product Specifications C-1

Product Specifications C-1

Appendix D: Regulatory Standards D-1

EMI Warning D-1
FCC Class A Certification D-1
Voluntary Control Council for Interference (VCCI-1) D-2
EN55022 Declaration of Conformance D-3
CE Mark Declaration of Conformance D-3
Safety Compliance D-4

Underwriters Laboratories Compliance Statement D-4
Sicherheitshinweise D-5

Appendix E: Product Support Services E-1

Product Registration E-1
Problem Report E-1
Hardware Repair Service E-1
Software Update and Upgrade Service E-2
Bulletin Board Service (BBS) E-2
Interactive Fast Fax (U.S.A. office) E-3
Technical Support E-3
Limited Warranty E-4
  Customer Remedies E-4
  Return Process E-5
Accton Offices E-6
Ordering Information E-7

Glossary

Index

List of Figures

Figure 2-1 Stacking Hubs without a Rack 2-2
Figure 2-2 Mounting Hubs Using a Mounting Rack 2-3
Figure 3-1 Attaching All Hubs in Stack to One Segment 3-5
Figure 3-2 Attaching Hubs in Stack to Three Segments 3-6
Figure 3-3 Linking Part of the Stacked Hubs to a Segment 3-7
Figure 3-4 Stacked Hubs Not Linked to a Segment 3-8
Figure 3-5 Linking Stacked Hubs to Unmanaged Hubs 3-9
Figure 3-6 Linking Stacked Hubs to an NMS 3-10
Figure 3-7 Linking Segments in a Stacked System 3-11
Figure 3-8 Connecting Remote Stacks 3-12
Figure 3-9 System Applied in Novell NetWare IPX Environment 3-13
Figure 3-10 System Applied in TCP/IP Environment 3-14
Figure 3-11 Connecting to the Network Backbone 3-15
Figure 4-1 Main Configuration Menu (12i only) 4-8
Figure 4-2 Configuration Menu for Extender Module (12i only) 4-9
Figure 4-3 Main Configuration Menu 4-11
Figure 4-4 Screen Messages for System Resart 4-13
Figure 4-5 System Information Menu 4-14
Figure 4-6 SNMP Configuration Menu 4-15
Figure 4-7 SNMP Communities Menu 4-16
Figure 4-8 IP Trap Managers Menu 4-17
Figure 4-9 IPX Trap Managers Menu 4-18
Figure 4-10 Segment Configuration Menu 4-19
Figure 4-11 Hub Configuration: Hub Selection Menu 4-21
Figure 4-12 Hub Configuration Menu 4-22
Figure 4-13 Hub ID Configuration Menu 4-24
Figure 4-14 Port Configuration: Port Selection Menu 4-25
Figure 4-15 Port Configuration Menu 4-26
Figure 4-16 SEM Port Configuration Menu 4-27
Figure 4-17 Port Backups Menu 4-29
Figure 4-18 Port Intrusion Control: Hub Selection Menu 4-30
Figure 4-19 Port Intrusion Control Menu 4-31
Figure 4-20 TFTP Download Menu 4-32
Figure 4-21 Xmodem Download Menu 4-34
Figure 4-22 User Passwords Menu 4-35
Figure 4-23 Console Lockout Menu 4-36
Figure 4-24 Segment Statistics Window 4-37

Figure 4-25 Hub Statistics: Hub Selection Menu 4-38
Figure 4-26 Hub Statistics Window 4-38
Figure 4-27 Port Statistics: Port Selection Menu 4-39
Figure 4-28 Port Statistics Menu 4-40
Figure 4-29 SEM Port Statistics Menu 4-42
Figure 5-1 Front Panel of EtherHub-12mi 5-1
Figure 5-2 Indicators for EtherHub-12mi 5-2
Figure 5-3 Rear Panel 5-15
Figure B-1 RJ-45 Connector (on the Hub Side) B-1
Figure B-2 DB9 Serial Port (on the Hub Side) B-2

List of Tables

Table 2.1 Calculating the Power Budget for Fiber Optics 2-8
Table 2.2 Power Budget for Common Guage Fiber Optics 2-9
Table 2.3 Diagnostic Test Functions 2-13
Table 2.4 Checking Key LED Indicators 2-15
Table 2.5 Maximum Cable Length 2-16
Table 4.1 Configuration Options in Main Menu (12i only) 4-9
Table 4.2 Configuration Options for Extender Module (12i only) 4-10
Table 4.3 Main Configuration Menu 4-12
Table 4.4 System Information Menu 4-14
Table 4.5 SNMP Configuration Menu 4-15
Table 4.6 SNMP Communities Menu 4-16
Table 4.7 IP Trap Managers Menu 4-17
Table 4.8 IPX Trap Managers Menu 4-18
Table 4.9 Segment Configuration Menu 4-20
Table 4.10 Hub Configuration Menu 4-23
Table 4.11 Port Configuration Menu 4-26
Table 4.12 SEM Port Configuration Menu 4-28
Table 4.13 Port Backups Menu 4-30
Table 4.14 Port Intrusion Control Menu 4-31
Table 4.15 TFTP Download Menu 4-33
Table 4.16 Xmodem Download Menu 4-34
Table 4.17 User Passwords Menu 4-35
Table 4.18 Console Lockout Menu 4-36
Table 4.19 Segment Statistics Menu 4-37
Table 4.20 Hub Statistics Menu 4-39
Table 4.21 Port Statistics Menu 4-41

Table 4.22 SEM Port Statistics Menu 4-42
Table 5.1 Power Indicator 5-2
Table 5.2 SmartExtender Module Indicator 5-2
Table 5.3 SmartExtender Module Indicators 5-3
Table 5.4 Interhub Indicator 5-3
Table 5.5 SNMP Indicator 5-4
Table 5.6 Management Agent Indicators 5-5
Table 5.7 Hub Indicators 5-6
Table 5.8 Serial Indicator 5-6
Table 5.10 Terminator Indicator 5-7
Table 5.11 Isolation Indicator 5-7
Table 5.12 Utilization Indicators 5-7
Table 5.13 Collision Indicators 5-8
Table 5.14 Partition/Disable Indicators 5-9
Table 5.15 Link/Traffic Indicators 5-10
Table 5.16 Diagnostic Indicators 5-11
Table 5.17 Diagnostic Results 5-12
Table B.1 RJ-45 Pin Assignments B-1
Table B.2 DB9 Port Pin Assignments B-2
Table B.3 Full-Pin Connection from Hub’s 9-Pin Serial Port to PC’s 9-Pin COM Port B-3
Table B.4 Three-Pin Connection from Hub’s 9-Pin Serial Port to PC’s 9-Pin COM Port B-3
Table B.5 Full-Pin Connection from Hub’s 9-Pin Serial Port to PC’s 25-Pin DTE Port B-4
Table B.6 Three-Pin Connection from Hub’s 9-Pin Serial Port to PC’s 25-Pin DTE Port B-4
Table B.7 Hub’s 9-Pin Serial Port to Modem’s 25-Pin DCE Port Pin Assignments B-5
Table E.1 Parameters for SmartExtender Modules E-7

Chapter 1: Product Overview

Introduction to Fast Ethernet

Standard 10 Mbps Ethernet has served well for past generations of 80286 and 80386 machines performing simple file transfers. However, with the inevitable growth in corporate network size and the introduction of fully-functional 32-bit PC architectures, and operating systems running complex applications, 10 Mbps Ethernet has become a serious bottleneck.

With the recent flood of choices for upgrading media bandwidth, 100 Mbps Fast Ethernet has become the most popular choice because of its low cost, compatibility with existing Ethernet applications, and the fact that it can run on top of an installed base of twisted-pair cabling.

Moreover, by using a dual-speed switch (10 or 100 Mbps), Fast Ethernet can be easily integrated into an existing 10 Mbps Ethernet environment with no need for protocol translation or changes to network software. It also includes specifications for a media-independent interface (MII), which permits a switched connection to any of the 100BASE-T sublayers; i.e., 100BASE-TX (10BASE-T), 100BASE-FX or 100BASE-T4.

Brief Description of the Fast EtherHub 3500 System

The EtherHub 3500 System is a powerful and innovative LAN network enhancement and management product series. Each component in the system supports a Fast Ethernet multi-segment bus architecture that enhances traffic management and network bandwidth utilization. This system offers the network manager a wide range of flexible configuration options, allowing you to increase your network's bandwidth tenfold or more. In addition, the entire installation can be monitored and controlled via SNMP protocol through any network management station.

Moreover, the Fast EtherHub 3500 System provides advanced network security features including "Intrusion Protection" which ensures that only designated workstations are able to transmit packets onto the network. Management access via the out-of-band serial port or in-band via telnet is also password protected.

The basic components of this network system include:

Full Connectivity

- Provides **12** RJ-45 (MDI-X) 100BASE-TX Fast Ethernet (shielded) station ports for connecting devices to the network using straight-through shielded or unshielded twisted-pair cable (100Ω Cat 5 UTP or 100Ω STP)
- 1 RJ-45 (MDI) daisy-chain port for connection to a switching hub, eliminating the need for crossover cables
- 1 slot for optional SmartExtender Modules which provide a connection to 100BASE-TX (10BASE-T), 100BASE-T4 or 100BASE-FX via a switching port
- A multi-segment bus architecture that enhances traffic management and network bandwidth utilization
- 2 FlexBus ports for connecting to other hubs in a Fast EtherHub 3500 stack via FlexBus 3500 stack cable
- On-board management via the RS232 serial port connected directly to a terminal, or to a local or remote computer (that provides a standard RS232 port)

The specific components are the:

Fast EtherHub-12i

Intelligent Fast Ethernet Stackable Hub with 12 100BASE-TX Ports

The Fast EtherHub-12i conforms to the IEEE 802.3u repeater specification. It also serves as an intelligent hub which collects port statistics and records events for system administration. Basic configuration is provided by the on-board configuration program.

This hub can be used in a stand-alone configuration to form a simple Fast Ethernet LAN networking 2 to 12 computers using the RJ-45 station ports. Further network expansion can be achieved using the embedded tri-segment backplane, the MDI daisy-chain port, or one of the optional SmartExtender Modules.

Moreover, when stacked with other intelligent hubs through the FlexBus ports and connected to the Fast EtherHub-12mi SNMP management device, it can be monitored and controlled through in-band or out-of-band channels.

Fast EtherHub-12mi SNMP
Intelligent Fast Ethernet Stackable Hub with 12 100BASE-TX Ports;
including SNMP Managment Support

This model conforms to both the IEEE 802.3u repeater specification and the Simple Network Management Protocol (SNMP). It not only functions as a 12-port Fast Ethernet repeater, but also provides an on-board SNMP-based network management agent for monitoring and controlling various network components. It can monitor up to 6 intelligent hubs connected to the same stack (including itself) through the FlexBus port connection. This Fast EtherHub provides SNMP management for the connected stack via various Management Information Bases (MIBs), including MIB II, repeater MIB, and Accton’s private MIB.

SmartExtender Module -

- 100BASE-TX (EM3551-TX)
  Provides two RJ-45 ports, both of which can be connected to 10BASE-T or 100BASE-TX media types. Transmission speed is automatically set to 10 or 100 Mbps via auto-sensing, and half or full duplex via auto-negotiation.
- 100BASE-T4 (EM3551-T4)
  Provides two RJ-45 ports for 100BASE-T4 connection. Transmission speed is automatically set to 10 or 100 Mbps

via auto-sensing. Transmission mode for 100BASE-T4 is fixed at half duplex.

- 100BASE-FX (EM3551-FX-SC or EM3551-FX-ST)
  Provides two SC or ST type connectors for 100BASE-FX connection. Transmission mode is automatically set to half or full duplex via auto-negotiation. Transmission speed is fixed at 100 Mbps.

Power Module -

Power Module (EM3550-PWR)
Slide-in power module for use in the slots on the back of hub. When using two modules, the load is shared equally between both, reducing the chance of failure, but still providing backup power in case either module should fail.

In-Band Network Managment Software -

AccView/Open (SW6102)
This Windows-based network management software package analyzes and displays data received from the Fast EtherHub 3500 system. This package allows the network supervisor to access information from and set parameters for any hub in stack by transmiting commands to the appropriate management agent.

AccView should be installed on the network management station designated to manage the Fast EtherHub 3500 stack. The workstation may communicate with the stack via a network connection or from a remote site using SLIP run over TCP/IP. If segmented architecture is used, the network management station should be connected to the same segment as the SNMP management agent (i.e., Fast EtherHub-12mi).

The minimal configuration for network management station includes a 386 workstation with 10MB of available space on the hard drive, 2 MB on-board memory, a VGA display, and Windows version 3.1 or higher.

Distinguishing Factors of Fast EtherHub 3500 System

This system provides the following key features:

- Provides multi-segment architecture allowing the network to be split into three segments
- Supports fault-tolerant configuration by allowing port link backup and agent backup
- Supports management functions via SNMP
- Supports on-board management (using Accton’s proprietary Fast EtherHub 3500 System Configuration Program), and full software configurable in-band management using the optional AccView/Open (network management software)
- The on-board management agents support nearly any network environment by providing management options via SNMP/IP, SNMP/IPX and SNMP/Ethernet
- Provides extensive security features including port intrusion protection, as well as password protection for out-of-band access or in-band telnet access
- Supports redundant power supply

Basic Features of Fast EtherHub 3500 System

In addition to all the features mentioned above, the system provides:

Basic Repeater Functions

- Repeats all incoming frames to the connected segment
- Automatically partitions and reconnects devices which experience excessive collisions
- Jabber lockup protection provided by disabling any port that receives 64 Kbytes of continues data, and re-enabling the port after the condition improves

Outstanding Performance

- Total bandwidth of up to 300 Mbps
- The backplane contains 3 separate Ethernet segments, and a high-speed management channel
- Manages up to 6 concentrators using the FlexBus stack cable

Extensive Management Capabilities

- An extensive indicator panel for reporting network activity, and unit configuration, and for facilitating problem diagnosis
- Menu-driven configuration program can be accessed via a local or remote terminal connection to the hub’s serial port
- The Fast EtherHub model with the SNMP agent supports in-band network management using optional network management software such as Accton’s AccView/Open (not included with this package) to monitor and control a stacked system
- Provides one serial 9-pin RS232 port for out-of-band or remote in-band network management
- BOOTP support for dynamic address assignment
- Flash ROM on board the Fast EtherHub-12mi models for easily updating the SNMP agent

- Firmware update supported for the Fast EtherHub-12mi models via out-of-band Xmodem file transfer through the serial port, or in-band TFTP file transfer over the network

Networking Flexibility (via SmartExtender Modules)

- One slot supports optional slide-in network extender modules for connection to 10BASE-T, 100BASE-TX, 100BASE-T4 or 100BASE-FX (on a separate segment)
- Transparent bridging (between stack and external device) via optional network extender modules
- Uses adaptive cut-through switching (which dynamically changes between fragment free cut-through and store-and-forward depending on the CRC error rate)
- 100BASE-TX SmartExtender module automatically senses transmission speed (at 100 Mbps or 10 Mbps)
- 100BASE-TX and 100BASE-FX SmartExtender modules support two interface modes: full duplex or half duplex — auto-negotiates transmission mode for full duplex and half duplex (if same feature is supported by attached device); otherwise can be manually configured
- Automatically learns MAC addresses to build the routing information database
- Automatically filters local traffic
- Transparent to all higher level protocols

Easy Installation

- Flexible installation for desktop or rack (standard 19” size)
- Plug-and-play
- Self-diagnostics
- Automatic polarity detection and correction permits automatic recovery due to wiring errors
- Automatic ID assignment and auto-terminator setting for auto-configuration

- Adapts to universal wide range voltage power (i.e., 100V AC to 240V AC ± 10%, 50~60 ± 3Hz)
- Provides a slot for an optional backup power supply

Complete Standards Conformance

- Conforms to IEEE 802.3u Class I repeater specification and 100BASE-TX standard (i.e., 100 Mbps Fast Ethernet)
- Optional SmartExtender Modules conform to relevant IEEE specifications and standards for respective media types
- Supports MIB II, Repeater MIB, Ethernet MIB, and Accton's private MIB
- Conforms to Simple Network Management Protocol (SNMP)

Data Switching with the SmartExtender Modules

Switching Technology

The SmartExtender Modules that plug into the expansion slot on the front panel of the Fast Ethernet 3500 series use advanced switching techniques to provide a high-speed network backbone. Each extender module acts as a two-port Ethernet switch which effectively partitions the stack from the backbone.

The module scans the destination address from the packet header, searches the routing table provided for the incoming port and forwards the packet only if required, often before fully received. A learning function stores the address and corresponding segment identifier of each incoming and outgoing packet in a routing table. This information is subsequently used to filter packets whose destination address is on the same segment as the source address. This confines network traffic to its respective domain, reducing the overall load on the network.

Configuration Options for the SmartExtender Modules

The SmartExtender Modules can be connected to either a subnetwork, or directly to a server or key workstation. In addition to partitioning an overloaded network, they provide a connection between legacy 10BASE-T networks and the newer generation 100BASE-TX, and can be configured to operate in either full-duplex or half-duplex data transfer mode to support the interconnection requirements of other high-speed devices.

Only the 100BASE-TX and 100BASE-FX media support full-duplex operation.

These modules perform adaptive cut-through switching, which is capable of instantly forwarding or filtering a packet according to the destination address scanned from the packet header. This technique transmits packets with near-zero latency.

As a device functioning on the media access control (MAC) layer, the extender modules are protocol independent, and therefore compatible with IEEE802.3, IEEE802.3u, TCP/IP, NetWare, DECnet and XNS protocols. They can provide a connection between conventional 10BASE-T and high-speed 100BASE-TX networks; or can serve as a 2-port bridge in a 100BASE-TX or 100BASE-FX environment. Moreover, where traditional 100BASE-TX networks restrict the maximum distance between end-nodes to 205 meters, these modules break down this barrier. By breaking your network into smaller and more manageable segments, each linked to the larger network with a SmartExtender Module, the maximum distance for communications between end-nodes is unlimited (depending on the specific timing requirements of your network applications).

Switching Methods

Traditional bridges and routers use a switching method called **store-and-forward** in which the entire frame must be received before performing a table look-up for the destination node and forwarding the packet to the corresponding port. As a result, each packet experiences a hefty delay. It may be necessary to use store-and-forward when a lot data errors are occurring over the network, or when connecting to very slow devices. Compared to this “conservative” mode of operation, **fragment-free cut-through** switching significantly reduces packet transmission delay by picking the destination address out of the header as soon as the first full 64 bytes has been received. This technique directs the frame to the appropriate segment long before the full packet has been received. It also cleans up the data stream by preventing runts from being passed along, thereby improving data reliability.

Although fragment-free cut-though switching is recommended as the fastest method for most applications, store and forward is also supported by the SmartExtender Modules to guarantee flawless performance. To ensure that you can manage any kind of network load, the extender modules provide **adaptive cut-through** switching based on Accton's smart algorithm. This method dynamically changes the way it handles data based on the current error rate. This switching strategy start at fragment-free for a clean to moderately dirty data environment, and changes to store-and-forward for a highly contentious environment. By using this method, the SmartExtender Modules deliver the best networking performance under any environment.

Moreover, in addition to using adaptive switching to optimize throughput, these modules also support back pressure to eliminate frame loss after their buffers fill by "blocking" unwanted traffic from being passed onto a segment.

Chapter 2: Installing the System

This chapter describes how to install the Fast EtherHub unit and establish network connections. You may install this hub on any level surface (e.g., a table or shelf) or in a standard equipment rack. However, please take note of the following minimum site requirements before you begin.

Pre-Installation Requirements

Before you start actual hardware installation, make sure you can provide the right operating environment, including power requirements, sufficient physical space, and proximity to other network devices that are to be connected. Verify the following installation requirements:

- Power requirements: 100 to 240 VAC (± 10%) at 50 to 60 Hz (± 3Hz). The hub's power supply automatically adjusts to accept the input voltage level.
- The hub should be located in a cool dry place, with at least 10 cm. of space at the front and back for ventilation.
- Place the switch out of direct sunlight, and away from heat sources or areas with a high amount of electromagnetic interference.
- If you intend to mount the hub on a rack, make sure you have the mounting screws, brackets, bolts and nuts, and the right tools.
- Be sure the network cables and connectors needed for installation are available.

Hardware Installation

This hub is suitable for desktop or rack-mount installation. A good location is at the center of all the devices you want to link, close to a collapsed backbone, and near a power outlet.

☞ These hubs can be stacked with other hubs using a mounting rack or directly on top of one another. Refer to the sections on *Stacking Hubs without a Rack* or *Mounting Hubs in a Rack* for a description of these methods.

If you don't want to stack the hub with other hubs now, or you plan to use the hub in a stand-alone configuration, go to the section on *Connecting the Hub System*.

Stacking Hubs without a Rack

If you need to install a redundant power module, refer to *Installing a Backup Power Supply* on page 2-11, and complete that procedure before stacking the hub.

The hub can be stacked anywhere there is a sufficiently large flat space, such as on a table or desktop.

1. Stick the self-adhesive rubber foot pads (that come with this package) on each of the 4 hollow spaces located on the bottom of the first hub.
2. Place the first hub on a firm and flat surface in the area where you want the stack to be installed.
3. Attach the rubber feet on each hub before stacking them. They cushion the hub against shock/vibrations and provide space between each hub for ventilation.

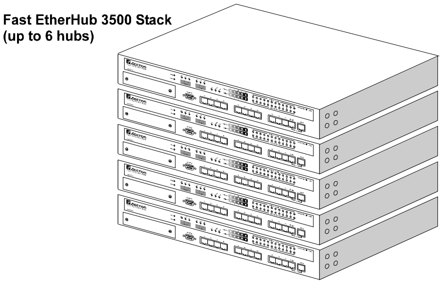

Figure 2-1 Stacking Hubs without a Rack

Mounting Hubs in a Rack

If you need to install a redundant power module, refer to *Installing a Backup Power Supply* on page 2-11, and complete that procedure before stacking the hub.

Please comply with the following instructions to ensure that your hub is securely mounted in the rack.

1. Use an standard EIA 19-inch rack.
2. Use a Phillips (i.e., cross-head) screwdriver to attach the brackets to the sides of the hub.
3. Position the hub in the rack by lining up the holes in the brackets with the appropriate holes on the rack, and then use the supplied screws to mount the hub in the rack.

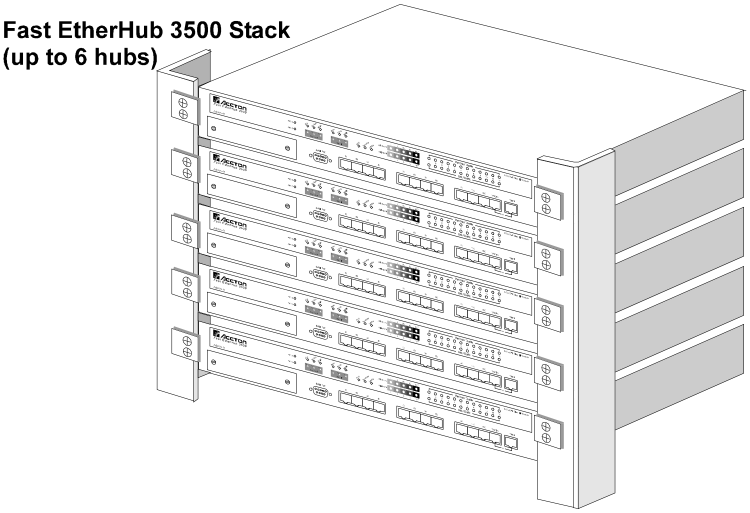

Figure 2-2 Mounting Hubs Using a Mounting Rack

Connecting the Hub System

Remember to label all your connections at both ends of the cable to facilitate troubleshooting or future changes to network configuration.

The Fast EtherHub has 12 RJ-45 shielded ports (i.e., 100BASE-TX) that support connections to 100 Mbps Fast Ethernet. Ports 1 - 12 (MDI-X) allow you to connect to devices such as a workstation, server or router. While Port 12 (MDI) lets you easily cascade to a compatible switch (i.e., connecting from MDI to MDI-X ports on either device).

This hub also provides an expansion slot for plugging in optional SmartExtender Modules. These modules support a single connection to 100BASE-TX (10BASE-T), 100BASE-T4 or 100BASE-FX. They provide a convenient way to attach to devices which use an alternate media type (e.g., linking fiber optic cable to a remote device).

The transmission speed for ports on the optional 100BASE-TX SmartExtender Module is automatically set at 10 or 100 Mbps to match the operating speed of the attached device. Moreover, the transmission mode of the ports on the optional 100BASE-TX and 100BASE-FX extender modules is automatically set at full or half duplex to match the optimum capability of the attached device.

Making a Connection via an MDI-X Station Port

You can connect an RJ-45 station port on the hub to any device that uses a standard LAN interface such as a workstation or server, or also to a network interconnection device such as a bridge or router (depending on the port type implemented).

1. Prepare the network devices you wish to network. Make sure you have installed suitable 100BASE-TX network interface cards before making a connection to any of the hub’s station ports. You also need to prepare straight-through 100Ω Category 5 shielded or unshielded twisted-pair cables with RJ-45 plugs at both ends.

2. Connect one end of the cable to the RJ-45 port of the network interface card, and the other end to any available (MDI-X) station port on the hub. Just remember that if you use Port 12MDI-X, the daisy-chain port (12MDI) cannot be used. When inserting an RJ-45 plug, be sure the tab on the plug clicks into position to ensure that it is properly seated. Using the hub in a stand-alone configuration, you can network up to 12 nodes.

Do not plug a phone jack connector into the RJ-45 port. This may damage the switch. Instead, use only twisted-pair cables with RJ-45 connectors that conform with FCC standards.

Notes:

1. Make sure each twisted-pair cable does not exceed 100 meters.
2. We advise using Category 5 cable for all network connections to avoid any confusion or inconvenience in the future when you upgrade attached devices to Fast Ethernet.
3. You may also connect a device to the switching port located on hub's front panel if required. However, be sure you use a SmartExtender Module that meets your communication requirements. Refer to *SmartExtender Module* in Chapter 1 for more details.
4. To facilitate troubleshooting, label all network cables to indicate the attached device and location.

Connecting to the Stack's Backplane

Plug one end of the FlexBus 3500 stack cable (provided with the base package) in the Out port of the top hub and the other end to the In port of the next hub. Repeat this step for each hub in the stack. Form a simple chain starting at the Out port on the first hub and ending at the In port on the last hub. Refer to FlexBus Ports in Chapter 5 for related information.

Hubs in a stack can only be grouped into segments through the FlexBus 3500 stack cable. You should therefore use the FlexBus ports to make Out to In connections in a stack.

Hubs in a stack can only be managed by the network management agent through the stack cable. In a managed stack, you should therefore use the stack ports to make Out to In connections, and include a management agent (i.e., a Fast EtherHub-12mi) in the chain.

You can also cascade hubs using the daisy-chain port (Port 12MDI). However, hubs cascaded using the daisy-chain port cannot be managed by the management agent. See the next section for details.

Making a Connection via the MDI Daisy-Chain Port

The Fast EtherHub 3500 hubs are Class I repeaters. Class I repeaters cannot be cascaded to another repeater in the same collision domain.

The daisy-chain port can only be cascaded to another device which breaks up the collision domain (e.g., an Ethernet switch).

Stackable Fast Ethernet hubs are generally restricted to Class I repeater types due to the timing requirements for passing traffic and management data across the stack's backplane. Although Class I repeaters cannot be cascaded to another device in the same collision domain via the daisy-chain port, more powerful interconnection options are provided via the hub's backplane and optional SmartExtender Modules.

The daisy-chain port can only be cascaded to another device which breaks up the collision domain (e.g., an Ethernet switch).

Prepare straight-through 100Ω Category 5 shielded or unshielded twisted-pair cables with RJ-45 plugs at both ends. Connect one end of the cable to the 12MDI port on this hub, and the other end to a standard MDI-X station port on the other device. Remember that when using the daisy-chain port (12MDI), station port (12MDI-X) cannot be used. When inserting an RJ-45 plug, be sure the tab on the plug clicks into position to ensure that it is properly seated.

Notes:
1. Make sure the twisted-pair cable does not exceed 100 meters.
2. To connect to a switch, you may also run straight-through twisted-pair cabling from a station port on this hub to a crossover port on the switch. However, if you must connect to a switch via station ports at both ends of the cable, use crossover cabling.

Connecting to a SmartExtender Module

The Fast Ethernet 3500 Series includes a network expansion slot on the front panel that supports connection to 100BASE-TX (10BASE-T), 100BASE-T4 or 100BASE-FX. Each SmartExtender Module acts as a two-port switch that can forward and filter data frames at line speed. One port is connected to the hub's internal repeater bus, while the other port (on the hub's front panel) can be used to connect the hub to any compatible network device. The optional extender modules include:

10BASE-T - EM3551-TX SmartExtender Module
100BASE-TX - EM3551-TX SmartExtender Module
100BASE-T4 - EM3551-T4 SmartExtender Module
100BASE-FX - EM3551-FX-ST SmartExtender Module
EM3551-FX-SC SmartExtender Module

Note: The EM3551-TX automatically adjusts to 10 or 100 Mbps using auto-sensing. Refer to *SmartExtender Module* in Chapter 1.

The SmartExtender Modules are not hot-swappable. Be sure you power off the hub before installing any of these modules.

Installing a SmartExtender Module - If you need to install an extender module, take the following steps:

Retain the face plate for possible future use.

1. Disconnect power to the hub.
2. Remove the face plate on the expansion slot (or a previously installed SmartExtender Module) by removing the two screws with a Phillips (i.e., cross-head) screwdriver.
3. Before opening the package that contains the extender module, touch the bag to the hub casing to discharge any potential static electricity.
4. Remove the module from the anti-static shielded bag.
5. Holding the module level, gently push it all the way into the expansion slot, ensuring that it firmly engages with the connector.
6. If you are sure the module is properly mated with the connector, replace the retainer screws to secure the module in the expansion slot.
7. Run corresponding media type between the extender module and the target device.

The SmartExtender Modules and not hot-swappable. Be sure the hub is powered off when installing these modules

Avoid running your cables near equipment that may generate electromagnetic interference.

Connecting Twisted-pair Cabling - For the 100BASE-TX and 100BASE-T4 modules, prepare Category 5 straight-through twisted-pair cables with RJ-45 plugs at both ends. When connecting the module directly to an end-node device (e.g., a workstation or file server), a bridge or router, run cable from the MDI-X port on the SmartExtender Module to the target device. However, when connecting the module to a hub or switch, connect one end of the cable to the MDI port on the extender module, and the other end to the MDI-X port on the target device (or vice versa). When inserting an RJ-45 plug, be sure the tab on the plug clicks into position to ensure that it is properly seated. Note that as a general rule, the length of any twisted-pair cable should not exceed 100 meters.

Connecting Fiber Optic Cabling - For the 100BASE-FX module, prepare fiber optic cable with SC or ST connectors at both ends. When connecting the module directly to an end-node device (e.g., workstation or file server), run cable from the Rx (Tx) port on the module to the Tx (Rx) port on the target device. Also, when daisy-chaining SmartExtender Modules, make similar connections between the current module and the next device in the stack. When inserting a cable, be sure the tab on the plug clicks into position, to ensure that it is properly seated. Note that as a general rule, the length of fiber optic cable should not exceed 2 kilometers. However, power budgeting must be considered when calculating the maximum cable length for your specific environment (as described later in this chapter).

Distance Limit and Power Loss in Fiber Optics - When using fiber optic cabling, the maximum length between two hubs can be up to 2 kilometers. However, you must consider power loss when calculating the actual length of cable that can be used with your system. You can calculate power loss with the following formula:

$$m = \frac{(p\ \mathrm{dB} - i\ \mathrm{dB})}{c\ \mathrm{dB/km}}$$

Variable	Description
m	cable length (kilometers)
p dB	power budget
i dB	intervening devices (e.g., patch cables and splices)
c dB/km	loss per kilometer of cable

Table 2.1 Calculating the Power Budget for Fiber Optics

Note: To determine the power loss incurred by intervening devices and specific cable type, inquire with the manufacturer. The power budget depends on the gauge of cable as shown below.

Gauge of Fiber Cable	Power Budget
50/125 µm	9.2 dB
62.5/125 µm	13 dB

Table 2.2 Power Budget for Common Guage Fiber Optics

For a sample calculation, assume the following values:

- cable gauge - 62.5/125 µm, which means a 13 dB power budget,
- 2 patch panels along the path, each with 1.5 dB power loss,
- 1 splice with 1 dB power loss, and
- inherent power loss in the cable is 4 dB/km

The maximum cable length is therefore:

$$m = \frac{13\text{ dB} - 4\text{ dB}}{4\text{ dB/km}} = 2.25\text{ km}$$

✋ When the 100BASE-FX link is set for the full-duplex communications (i.e., a dedicated connection), cable length should not exceed 2 kilometers. However, when the link is set for half-duplex communications (i.e., a shared collision domain), cable length should not exceed 412 meters (IEEE 802.3u).

Note: Even though your calculations for power loss may indicate a longer permissible length based on signal strength (as seen in the preceeding example), we advise remaining within the recommended limits.

Maximum Segment Length - In contrast to cascading devices through repeater ports, cascading through the SmartExtender Module breaks up the collision domain. The number of devices that can be cascaded is therefore theoretically unlimited. However, in practice, the length of a cascade (even one passing through switching ports, as implemented in the extender modules) may be limited by the time-out requirements of the particular applications running over the network. Considering these delay factors, the IEEE 802.1D standard (i.e., RFC for MAC bridges) recommends restricting the number of interconnection devices between any two nodes to seven.

Setting the Communication Mode - The 100BASE-TX and 100BASE-FX SmartExtender Modules both support half and full-duplex communications. The hub uses auto-negotiation to determine the transmission mode for any new connection made to these modules. However, if a connected device does not also support auto-negotiation, and a link cannot be established using half duplex (i.e., the last state tested by auto-negotiation), then you must manually set the transmission mode for the concerned port to full or half duplex via on-board configuration (Chapter 4) or using optional network management software.

Bridging Functions - The SmartExtender Modules form a separate segment (i.e., collision domain) from the rest of the ports in the stack. They therefore provide fully transparent bridging functions which automatically learns node addresses required to filter and forward traffic based on the destination address (i.e., traffic is filtered if the destination address is in the local collision domain, or forwarded if the destination is in another segment).

Note: Devices connected to the SmartExtender Module exist in a separate segment, and cannot be controlled by a management agent in the stack.

Switching Functions - These modules also provide functions commonly found on an Ethernet switch. The scheme used to process data packets is automatically adjusted to optimize system performance. Fragment-free cut-through or store-and-forward processing may be used depending on the current error rate. (Refer to Data Switching with the SmartExtender Modules in Chapter 1 for a detailed discussion of these processing methods.)

In addition to the features listed above, the extender modules also use back pressure to eliminate frame loss when its buffers fill, by "slowing" the traffic received from end stations or segments connected directly to this port.

Interconnecting Stack Segments - Hubs can be completely isolated from the stack, or can be attached to any of the three available segments embedded in the backplane. When attached to a segment (i.e., common collision domian), the hub can communicate with all other devices attached to that segment. (Refer to the discussion on Mult-Segment Architecture in Chapter 3, and to Configuring Hub Parameters in Chapter 4.)

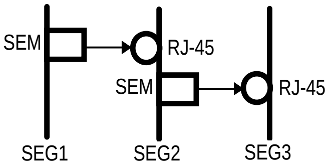

This stack has been fully interconnected using two extender modules.

A Fast EtherHub stack can be split into three separate (isolated) segments. The best way to interconnect these different segments is to connect a (100BASE-TX) SmartExtender Module to a repeater port on a hub in a different segment, using an MDI to MDI-X connection. Two extender modules can be used in this way to connect all three segments

You can also make a direct connection between extender modules (i.e., similar media types) that exist in two different segments in the stack. However, this approach is not only more costly, but also entails a slightly higher transit delay for trafffic passing between the segments.

The last alternative is to connect different segments via a Fast Ethernet switch or router. Because this is the most expensive approach, we do not advise it unless you already have a suitable interconnection device available.

Installing a Backup Power Supply

If you need to install a backup power module, take these steps:

1. Remove the face plate on the optional power bay (or a previously installed power module) by turning the two retaining knobs on the rear panel counterclockwise.
2. Holding the module level, gently push it all the way into the empty bay, ensuring that it firmly engages with the connector.
3. After you are sure the module is properly seated in the bay, tighten the retaining knobs to secure it in place.
4. Connect power to the backup power supply. Use separate AC circuits to provide optimal backup capability.

Note: Leave at least 12 inches clearance in the back of the hub (or stack) to facilitate system maintenance (e.g., removing power modules).

Powering on the Hub

1. Plug one end of the power cord into a power outlet, and the other end into the power socket at the rear of the hub (in that order for reasons of safety). Then plug in the backup power module if you purchased this option. For reliable backup, connect the backup power module to a separate AC circuit.
2. Check the LED indicator marked PWR1 (or PWR2) on the front panel to see if it is on. The unit will automatically select the setting that matches the connected input voltage. Therefore, no additional adjustments are necessary when connecting it to any input voltage within the range marked on the rear panel.
3. The hub performs a self-diagnostic test upon power-on. (Note that this test takes about 15 seconds to complete.) For details about the system self-diagnostic test, refer to the following section.

✋ The unit supports a "hot remove" feature which permits you to connect/disconnect network cables without powering off the hub and without disrupting the operation of the hubs in stack. However, when changing SmartExtender Modules or power supply modules, first disconnect power to the concerned hub.

Diagnostic Tests

Upon power on, the system performs an internal self-diagnostic test of major hub components. If any component fails during the test, the hub will try to complete the diagnostic procedure. Otherwise, the system will hang. For related information, refer to Diagnostics Test Indicators in Chapter 5.

The following table shows the components to be tested.

Test Function/Component	
Fast EtherHub-12i	**Fast EtherHub-12mi**
Boot ROM	All tests listed for Fast EtherHub-12i
Hub Configuration EEPROM	*and then the following tests:*
RAM for Repeater Board CPU	Console I/O
Repeater Information Base SRAM	Flash ROM for SNMP Firmware
Repeater Interface Controller	EEPROM for Stack Configuration
Routing Table for Internal SEM Port	DRAM Buffer for Management Program
Input Queue for Internal SEM Port	Management Bus Output Buffer
Output Queue for Internal SEM Port	Management Bus Input Buffer
Routing Table for External SEM Port	Network Interface Controller
Input Queue for External SEM Port	
Output Queue for External SEM Port	

Table 2.3 Diagnostic Test Functions

Hot Remove

The Fast EtherHub 3500 System supports "hot remove" capability that allows you to connect/disconnect hubs or media connectors from the system with minimal disruption to the network. You can remove any network cabling without affecting traffic passing across the internal repeater bus. However, if the FlexBus 3500 stack cable is disconnected at any point in the stack, or is not properly terminated, all Ethernet and management traffic passing across the stack's backplane will be disrupted.

When changing modules in the expansion slot or changing power supply modules, first disconnect power to the concerned hub.

Configuring a Manageable Stack

To manage the stack with the on-board configuration program or any optional network management software, the stack must include an EtherHub-12mi (i.e., a unit with an SNMP agent). Moreover, the network management station must be able to access the segment containing the management agent.

You should also consider adding a backup SNMP agent to provide greater management reliability for critical applications. The procedures required to install a backup agent is described below.

Installing an SNMP Backup Agent

The on-board configuration program only provides access to the private MIB. To gain full SNMP functionality, you must use optional network management software (e.g., AccView/Open).

Just add the backup agent(s) to the stack and let the system automatically choose the Master agent and the Slave agent based on longest up-time. The Master indicator on the device chosen as the primary agent will turn ON. The Backup indicator will turn ON for all other hubs (attached to the same segment) that contain SNMP agents.

Note: If you attach SNMP agents to separate segments, be sure they are assigned unique IP addresses via on-board configuration (as described under *Changing the Segment Configuration* in Chapter 4).

Verifying Port Status

Check each connection by viewing the port status indicators listed below. (For a more detailed description on these indicators, refer to Chapter 5.)

LED	State	Indication
Link	On	Port has established a valid network connection.
Traffic	Blinking	Traffic is traversing the port.
Tx/Rx[1]	Blinking	Traffic is traversing the port.
100[1]	On	Communications have been set to a speed of 100 Mbps.
FDX[1]	On	Communications have been set to full-duplex mode.

1 - The indicators appear on the front of the SmartExtender Module.

Table 2.4 Checking Key LED Indicators

If the Link status indicator is not functioning properly, or you experience any other difficulties in setting up the switch, refer to Appendix A.

Verifying System Operation

Verify that all attached devices have a valid connection. The hub monitors link status for each port. If any device is properly connected to the hub and transmitting a link beat signal, the Link indicator lights for the corresponding port. If the Link indicator fails to light when you connect a device to the hub, check the following items -

- Be sure the media cable is properly attached to the connected device and the hub. Verify that the cable connector snaps into place when attached.
- See if the media cable is functioning properly by using it for another port and attached device that displays valid indications when connected to the network.

- Verify that you have not exceeded the specified limits for any attached media type as summarized in the following table:

Media Type	Maximum Length (meters)
Twisted Pair	100
Fiber Opitc	412 (at half duplex) 2000 (at full duplex)

Table 2.5 Maximum Cable Length

- If a computer is attached to the hub, verify that its adapter card is functioning properly by trying it in another computer that has been successfully connected to the network.
- When using the 100BASE-TX or 100BASE-FX SmartExtender Module, both sides of each connection must use the same transmission mode (i.e., full or half duplex). If the device connected to the hub operates at full duplex but does not support auto-negotiation, then you must manually set the transmission mode with the configure button. (Refer to section on Communication Mode earlier in this chapter.)

If you still can't resolve the problem, please refer to Troubleshooting in Appendix A.

Chapter 3: Setting up Network Connections

Special Architecture Used for the Fast EtherHub 3500 Stack

Multi-Segment Architecture

The Fast EtherHub 3500 system supports multi-segment configuration through the FlexBus cabling. Three Ethernet segments (i.e., separate collision domains) are embedded in the hub's FlexBus port (i.e., the stack's backplane). You can choose to attach a hub to one of these segments, or to leave it isolated except for the management channel. Nodes attached to a specific segment (e.g., Segment 1) can only communicate with nodes attached to the same segment (unless the segments are interconnected with a device such as an Ethernet switch). This type of architecture makes the system more flexible, provides better traffic load sharing and data protection, improves network bandwidth utilization, and simplifies troubleshooting.

Carefully plan your network setup to make this architecture work well for your system. Form a common domain for devices that need to frequently communicate with each other by attaching them to the same segment. In this way you can arrange network resources to balance traffic and thereby increase overall network efficiency.

To combine the segments into an interconnected network (while at the same time retaining the higher effective bandwidth and segment integrity provided by the multi-segment architecture), attach each segment to a switch or similar interconnection device, such as one of Accton's Fast Ethernet Switches.

FlexBus 3500 Management Link

The management link in a chain of cascaded hubs must be connected to manage the stack as a single unit. This means that only hubs connected using the FlexBus can be controlled by an SNMP management agent (i.e., Fast EtherHub-12mi). At most, 6 hubs can be managed and linked together using the FlexBus connection.

Hub ID Setting

In a stacked system, each hub should have a unique ID number to identify itself. Each hub automatically sets an ID number if attached to an SNMP management agent through the FlexBus port (i.e., Fast EtherHub-12mi). When a new hub is inserted in the stack, the next available hub identifier is assigned to the new hub (i.e., the identifier numbers are not changed for previously configured hubs). When the stack includes a management agent, you can also set hub IDs using the on-board configuration program. Refer to Configuring Hub Parameters in Chapter 4 for more information.

Using Management Agents

The Fast EtherHub-12mi SNMP includes an SNMP management agent. To add SNMP functionality to the entire stack, this hub type must be included in the stack. To provide in-band access to the agent you must also attach your network management station to a the segment that includes the management agent.

Multiple Agents

The on-board configuration program only provides access to the private MIB. To gain full SNMP functionality, you must use optional network management software (e.g., AccView/Open).

You may include multiple agents in a stack. To provide a fail-safe backup management agent, include it in the same segment with the Master agent. You may also use several active agents in the same stack. However, they must be attached to different segments and have unique IP addresses.

SNMP Backup Agent

The Fast EtherHub 3500 system supports a backup function for the management agent. This special function allows the stack to have two or more SNMP network management agents attached to the same segment, wherein one agent is configured as the Master agent and the other(s) as a Slave (i.e., Backup) agent.

The agent in slave mode behaves as a Fast EtherHub-12i. But if the Master agent fails, the Slave agent takes over its functions using the latest data mirrored from the Master, including its IP address. Note that to manage the stack out-of-band after the Slave has assumed control, you must plug your PC or modem into the Serial port of the Slave agent. If you are using optional network management software, just ensure that your network management station can access the new control agent via its current network connection.

Note: Placing redundant agents in a segment will cause the system to set the agent with longest up-time as the Master, and the other(s) as a slave. If more than one slave exists in a segment, the slave higher up in the FlexBus chain will be chosen to function as the Master if it fails.

Port Backup Function

The Fast EtherHub 3500 system supports a port backup function (i.e., a redundant link). A hub system can have up to 18 pairs of redundant links. These links are configurable using the in-band or out-of-band management program. When a primary link fails, the secondary (i.e., backup) link automatically takes over.

Notes:
1. To prevent traffic from looping, the primary port is enabled and the backup port disabled. If the system is functioning normally, the Link indicator for the primary port and the Partition indicator for the backup port will be on.
2. It is common practice to attach these links to the same physical device (e.g., two separate adapter cards on a critical server). However, to provide more flexibility, this is not enforced by the configuration program.

Security Features

Intrusion Protection

Any repeater port on the hub can be configured with a preferred source address. If an unauthorized intruder is detected, the network management station can be notified, or a trap can be sent and the port disabled.

Sample Network Configurations

The Fast EtherHub 3500 series stackable hubs are designed to provide flexibility in configuring network connections. This hub can be used as a simple stand-alone hub or connected to other network interconnection devices in various configurations. This section includes sample applications, most of which take advantage of the multi-segment architecture. Pay attention to the examples that illustrate how to segment a hub stack. This procedure can extend network bandwidth up to 300 Mbps.

Attaching the Stack to One Segment

You can attach all the hubs in a stacked system to the same segment. In this example, a stacked system using the FlexBus port connection is connected to segment 1.

Putting all hubs in the same segment groups all nodes attached to the stack in a single collision domain. All Ethernet frames transmitted by any node are seen by every other node in the stack. For a heavily loaded network, you can significantly improve performance by configuring the stack into separate segments as shown in the next example.

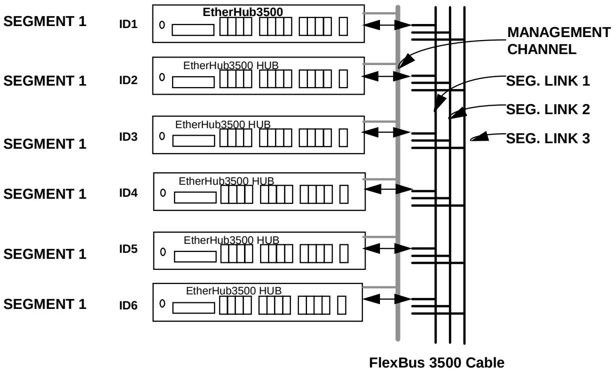
SEGMENT 1
ID1
EtherHub3500
0
MANAGEMENT CHANNEL
SEGMENT 1
ID2
EtherHub3500 HUB
0
SEG. LINK 1
SEG. LINK 2
SEGMENT 1
ID3
EtherHub3500 HUB
0
SEG. LINK 3
SEGMENT 1
ID4
EtherHub3500 HUB
0
SEGMENT 1
ID5
EtherHub3500 HUB
0
SEGMENT 1
ID6
EtherHub3500 HUB
0
FlexBus 3500 Cable

Figure 3-1 Attaching All Hubs in Stack to One Segment

Attaching the Stack to Multiple Segments

This example shows 3 independent Ethernet LANs in a stacked system. Hubs 1 and 2 are attached to segment 1, while hubs 3 and 4 are attached to segment 2, and hubs 5 and 6 are attached to segment 3.

This configuration serves to both balance the network load and improve performance. Using three separate segments provides 300 Mbps of Ethernet bandwidth to the overall stack. Moreover, using a segmented configuration serves to confine the effects of heavy loading or network problems to a single segment.

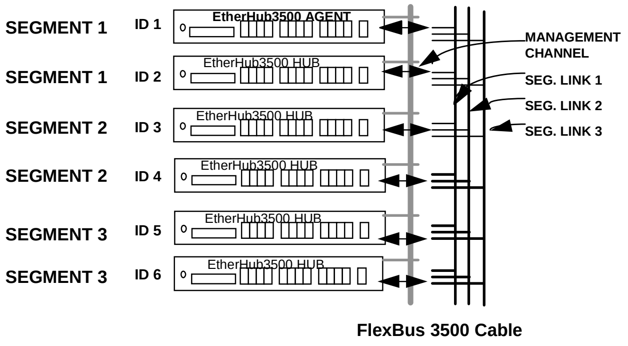
SEGMENT 1
ID 1
EtherHub3500 AGENT
SEGMENT 1
ID 2
EtherHub3500 HUB
SEGMENT 2
ID 3
EtherHub3500 HUB
SEGMENT 2
ID 4
EtherHub3500 HUB
SEGMENT 3
ID 5
EtherHub3500 HUB
SEGMENT 3
ID 6
EtherHub3500 HUB
MANAGEMENT CHANNEL
SEG. LINK 1
SEG. LINK 2
SEG. LINK 3
FlexBus 3500 Cable

Figure 3-2 Attaching Hubs in Stack to Three Segments

☞ Traffic in each segment is restricted to that segment and cannot pass to another segment without a device such as a SmartExtender Module or one of Accton's Fast Ethernet Switches to link them.

Isolating Specific Hub Connections

You can interconnect or isolate the hubs in a stack using a multi-segment configuration. In a stacked system, some hubs may be connected to a segment while others are isolated (not attached to any segment). In this example, hubs 1 and 2 are attached to segment 1, while hubs 3 and 4 are attached to segment 2. However, hubs 5 and 6 are not connected to any segment. These hubs form isolated segments. With careful planning, you can restrict access for specific user groups to required connections only.

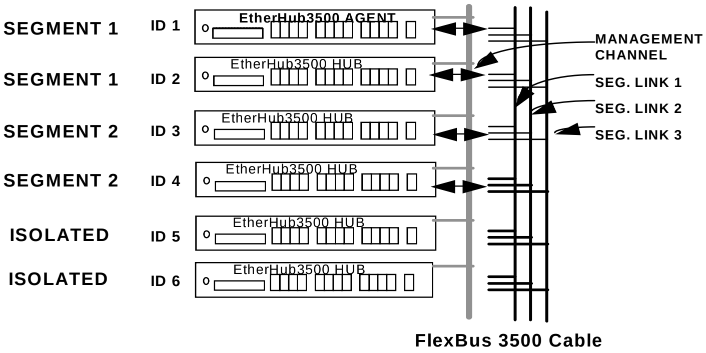
SEGMENT 1
ID 1
EtherHub3500 AGENT
SEGMENT 1
ID 2
EtherHub3500 HUB
SEGMENT 2
ID 3
EtherHub3500 HUB
SEGMENT 2
ID 4
EtherHub3500 HUB
ISOLATED
ID 5
EtherHub3500 HUB
ISOLATED
ID 6
EtherHub3500 HUB
MANAGEMENT CHANNEL
SEG. LINK 1
SEG. LINK 2
SEG. LINK 3
FlexBus 3500 Cable

Figure 3-3 Linking Part of the Stacked Hubs to a Segment

☞ When hubs are isolated, they cannot communicate with any other device in the stack via the FlexBus.

Isolating Each Hub

In this example, each hub in the stack is an independent segment (i.e., isolated collision domain). Hubs 2 to 6 are not connected to any of the 3 segments embedded in the FlexBus 3500 cable.

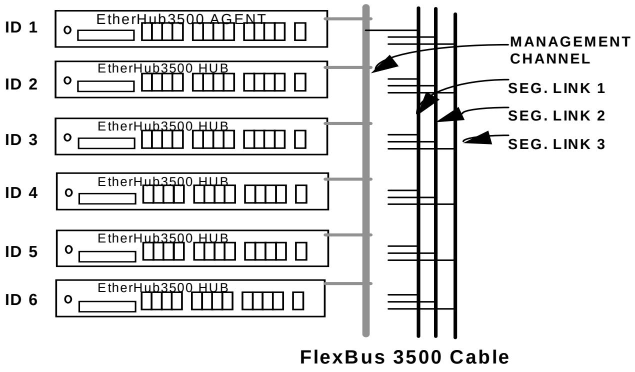
ID 1
EtherHub3500 AGENT
ID 2
EtherHub3500 HUB
ID 3
EtherHub3500 HUB
ID 4
EtherHub3500 HUB
ID 5
EtherHub3500 HUB
ID 6
EtherHub3500 HUB
MANAGEMENT CHANNEL
SEG. LINK 1
SEG. LINK 2
SEG. LINK 3
FlexBus 3500 Cable

Figure 3-4 Stacked Hubs Not Linked to a Segment

If the Fast EtherHub-12mi is isolated from the backplane (i.e., not attached to any of the 3 segments), the stack can still be managed with the out-of-band configuration program via the management channel embedded in the FlexBus 3500 cable.

Extending the Network with Alternate Connections

You can extend your network by connecting any of the hubs in a stacked system to other compatible hubs via the SmartExtender Module. In the diagram below, a stand-alone hub is connected to hub 3 in the stacked system using the extender module. However, remember that the Fast EtherHub 3500 Agent can only manage hubs connected to it through the FlexBus connection.

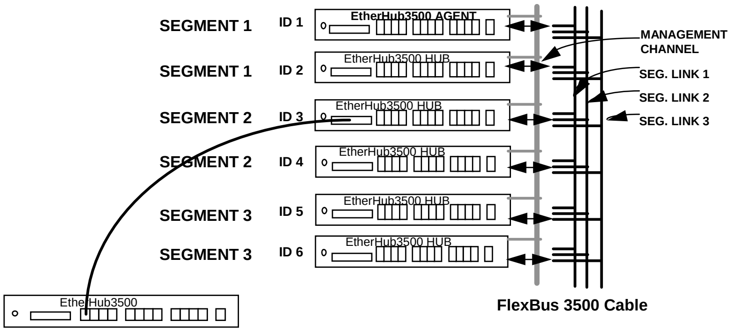
SEGMENT 1
ID 1
EtherHub3500 AGENT
SEGMENT 1
ID 2
EtherHub3500 HUB
SEGMENT 2
ID 3
EtherHub3500 HUB
SEGMENT 2
ID 4
EtherHub3500 HUB
SEGMENT 3
ID 5
EtherHub3500 HUB
SEGMENT 3
ID 6
EtherHub3500 HUB
MANAGEMENT CHANNEL
SEG. LINK 1
SEG. LINK 2
SEG. LINK 3
EtherHub3500
FlexBus 3500 Cable

Figure 3-5 Linking Stacked Hubs to Unmanaged Hubs via the SmartExtender Module

Linking the Stack to a Management Station

In a stacked system, connect the in-band management workstation to the same segment that the management agent is attached to. In this example, the management agent is attached to segment 1. Thus, the in-band management workstation (e.g., a PC running AccView/Open) should also be connected to segment 1.

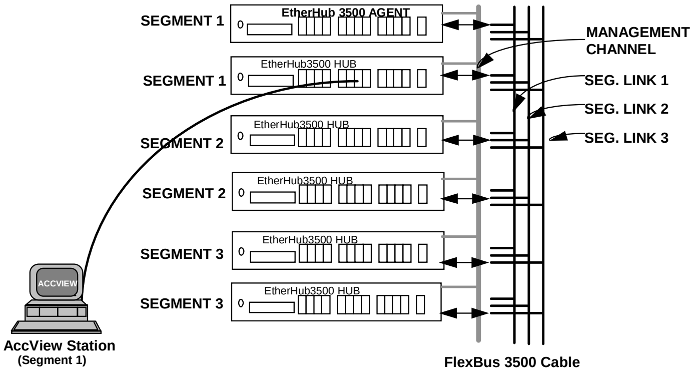
SEGMENT 1
EtherHub 3500 AGENT
SEGMENT 1
EtherHub3500 HUB
SEGMENT 2
EtherHub3500 HUB
SEGMENT 2
EtherHub3500 HUB
SEGMENT 3
EtherHub3500 HUB
SEGMENT 3
EtherHub3500 HUB
MANAGEMENT CHANNEL
SEG. LINK 1
SEG. LINK 2
SEG. LINK 3
ACCVIEW
AccView Station
(Segment 1)
FlexBus 3500 Cable

Figure 3-6 Linking Stacked Hubs to a Network Management Station

Interconnecting the Segments

The 3 segments within a stacked system can be combined into an interconnected network using the SmartExtender Modules. For example, you can connect all the segments in the stack using just two extender modules as shown below. Using this approach, you provide a higher bandwidth by using three separate collision domains, but still permit stations to communicate with nodes in other segments, as required.

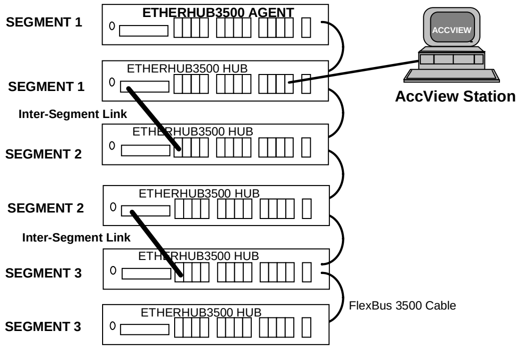
SEGMENT 1
ETHERHUB3500 AGENT
0
ACCVIEW
ETHERHUB3500 HUB
SEGMENT 1
AccView Station
Inter-Segment Link
ETHERHUB3500 HUB
SEGMENT 2
SEGMENT 2
ETHERHUB3500 HUB
Inter-Segment Link
ETHERHUB3500 HUB
SEGMENT 3
FlexBus 3500 Cable
SEGMENT 3
ETHERHUB3500 HUB

Figure 3-7 Linking Segments in a Stacked System

Connecting Remote Stacks

Fast EtherHub stacks can be connected by using the SmartExtender Modules. For example, you can connect two stacks by running a cable from the extender module in one stack to any station port in a remote stack. When using twisted-pair cable, the maximum cable length is 100 meters. Also note that when you connect directly to a repeater bus in this manner, the transmission mode is limited to half duplex.

You can connect stacks over an even greater distance if you run fiber optic cable between SmartExtender Modules in both stacks. When you connect to switching ports at both ends of the cable, the transmission mode is automatically set to full duplex, allowing you can run a fiber optic link up to 2 kilometers. However, if you must operate at half duplex, then the maximum separation between stacks is 412 meters .

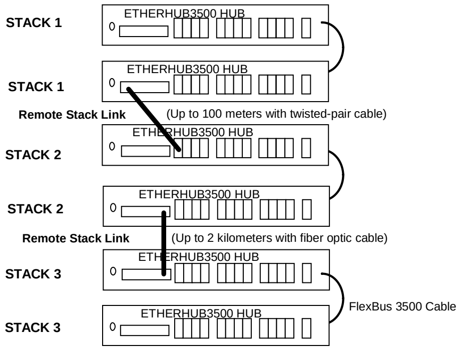
STACK 1
ETHERHUB3500 HUB
0
STACK 1
ETHERHUB3500 HUB
0
Remote Stack Link
(Up to 100 meters with twisted-pair cable)
STACK 2
ETHERHUB3500 HUB
0
STACK 2
ETHERHUB3500 HUB
0
Remote Stack Link
(Up to 2 kilometers with fiber optic cable)
STACK 3
ETHERHUB3500 HUB
0
FlexBus 3500 Cable
STACK 3
ETHERHUB3500 HUB
0

Figure 3-8 Connecting Remote Stacks

Operating in the Novell NetWare IPX Environment

If you’re using Novell NetWare server as your Network Operating System, you can have up to 3 LAN adapters installed in the File Server. With this type of setup, the network is perceived as logically divided into different collision domains, but the File Server is still accessible by all nodes. As shown in the following figure, three LAN adapters installed in a NetWare server are each connected to a hub in the stack with IPX Protocol bound to each adapter.

The first adapter is attached to segment 1 with IPX network number 102; the second adapter is attached to segment 2 with IPX network number 103; and the third one is connected to segment 3 with IPX network number 104.

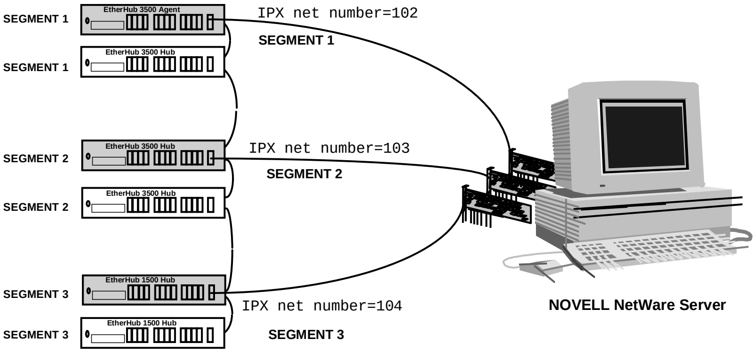
SEGMENT 1
EtherHub 3500 Agent
IPX net number=102
SEGMENT 1
SEGMENT 1
EtherHub 3500 Hub
SEGMENT 2
EtherHub 3500 Hub
IPX net number=103
SEGMENT 2
SEGMENT 2
EtherHub 3500 Hub
SEGMENT 3
EtherHub 1500 Hub
IPX net number=104
NOVELL NetWare Server
SEGMENT 3
EtherHub 1500 Hub
SEGMENT 3

Figure 3-9 System Applied in Novell NetWare IPX Environment

Operating in the TCP/IP Environment

In TCP/IP Internet environment, gateways are used to improve performance and regulate network traffic by confining most network activity to their respective local network, and still maintain communication links among LANs of the same or different architectures. You can implement an IP subnet gateway if you have an IP network address (e.g., 140.20.0.0). For example, in a Fast EtherHub 3500 system (as shown in the figure below), you can attach three LAN adapters to your subnet gateway using a UNIX server. Perform the following steps.

Assign IP addresses from 140.20.1.1 ~ 140.20.1.254 to nodes on segment 1, and set their subnet mask to 255.255.255.0.

Assign IP addresses from 140.20.2.1 ~ 140.20.2.254 to nodes on segment 3, and set their subnet mask to 255.255.255.0.

Assign IP addresses from 140.20.3.1 ~ 140.20.3.254 to nodes on segment 2, and set their subnet mask to 255.255.255.0.

Assign IP address 140.20.1.10 to the first adapter, 140.20.2.20 to the second adapter, and 140.20.3.30 to the third one.

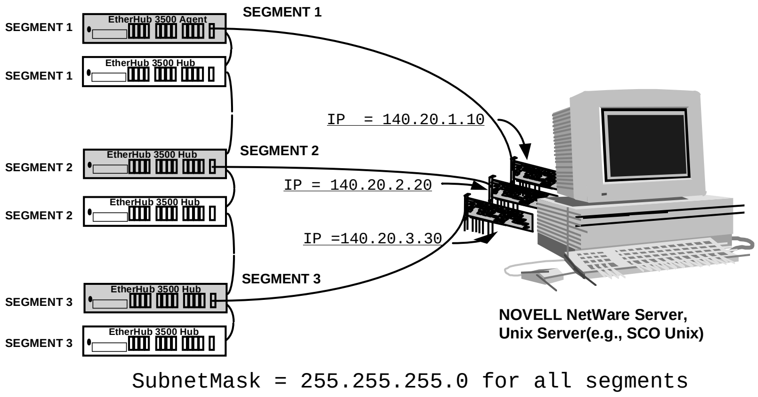
SEGMENT 1
EtherHub 3500 Agent
SEGMENT 1
SEGMENT 1
EtherHub 3500 Hub
IP = 140.20.1.10
SEGMENT 2
EtherHub 3500 Hub
SEGMENT 2
IP = 140.20.2.20
SEGMENT 2
EtherHub 3500 Hub
IP =140.20.3.30
SEGMENT 3
SEGMENT 3
EtherHub 3500 Hub
SEGMENT 3
EtherHub 3500 Hub
NOVELL NetWare Server,
Unix Server(e.g., SCO Unix)
SubnetMask = 255.255.255.0 for all segments

Figure 3-10 System Applied in TCP/IP Environment

Connecting to the Network Backbone

The stack can be connected to the network backbone by attaching it to a device such as a Fast Ethernet switch. The following figure shows a direct connection from the stack's daisy-chain port to a 100BASE-TX switch which is serving as collapsed network backbone.

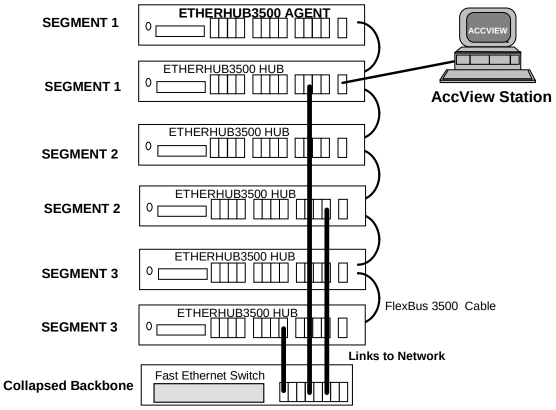
SEGMENT 1
ETHERHUB3500 AGENT
SEGMENT 1
ETHERHUB3500 HUB
ACCVIEW
AccView Station
SEGMENT 2
ETHERHUB3500 HUB
SEGMENT 2
ETHERHUB3500 HUB
SEGMENT 3
ETHERHUB3500 HUB
SEGMENT 3
ETHERHUB3500 HUB
FlexBus 3500 Cable
Links to Network
Collapsed Backbone
Fast Ethernet Switch

Figure 3-11 Connecting to the Network Backbone

Configuring IPX Trap Managers

When the hub experiences an unusual event, a message is issued to all listed network managers. Networks compliant with Internetwork Packet Exchange (NetWare IPX) protocol can pass trap messages to *IPX Trap Managers* as shown below:

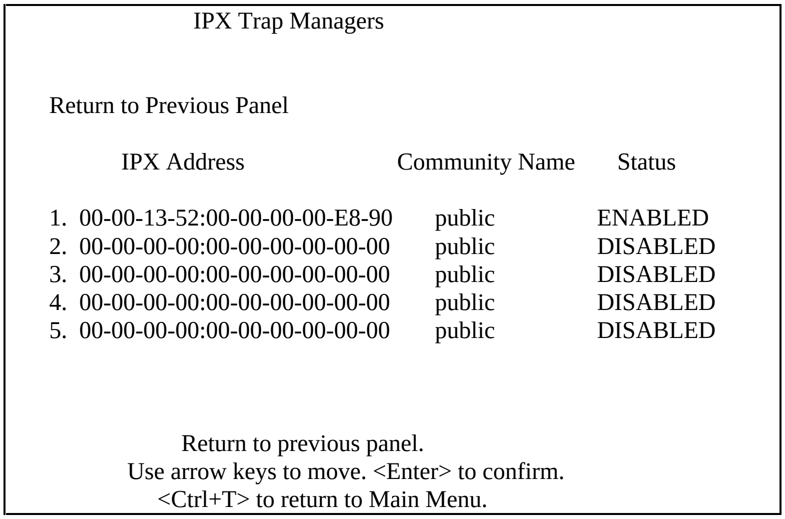

```
                    IPX Trap Managers


     Return to Previous Panel

             IPX Address                    Community Name     Status

     1.  00-00-13-52:00-00-00-00-E8-90      public             ENABLED
     2.  00-00-00-00:00-00-00-00-00-00      public             DISABLED
     3.  00-00-00-00:00-00-00-00-00-00      public             DISABLED
     4.  00-00-00-00:00-00-00-00-00-00      public             DISABLED
     5.  00-00-00-00:00-00-00-00-00-00      public             DISABLED



                   Return to previous panel.
             Use arrow keys to move. <Enter> to confirm.
                <Ctrl+T> to return to Main Menu.
```

Figure 4-9 IPX Trap Managers Menu

Menu items are briefly described in the following table.

Field	Description
IPX Address	IPX address of the trap receiver. (Provide dotted decimal notation with both the network and MAC address components.)
Community Name	The community string required for trap management access.
Status	The status of the current entry can be set to ENABLED or DISABLED.

Table 4.8 IPX Trap Managers Menu

Changing the Segment Configuration

When accessing the EtherHub system with in-band tools such as SNMP, Telnet or TFTP, you must configure the hub to use IP, IPX or SNMP over Ethernet protocols. Use the *Segment Configuration* menu to display the following screen:

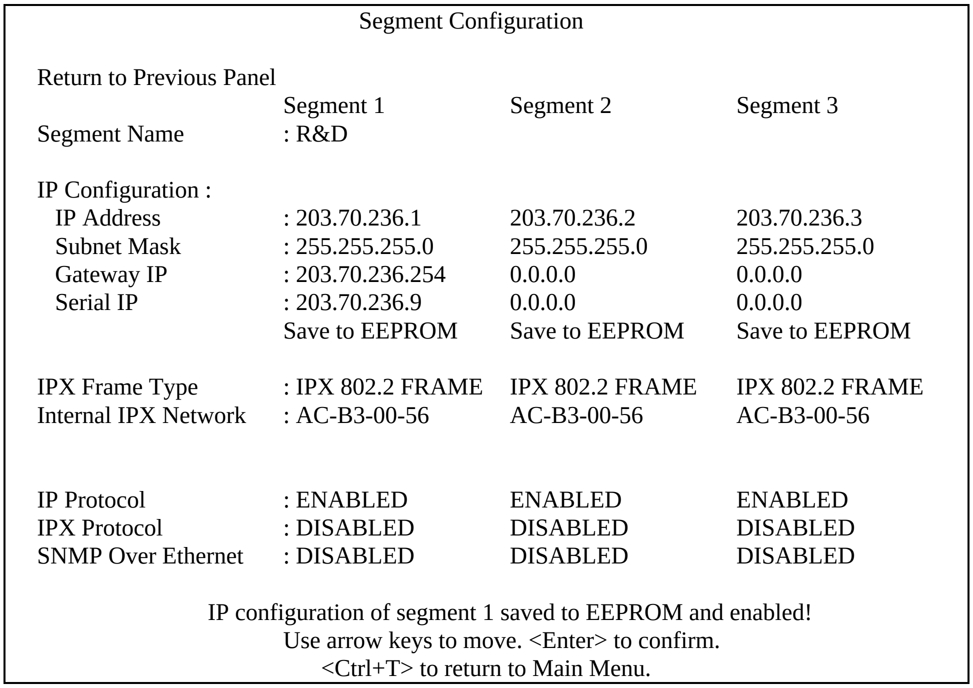

```
                              Segment Configuration

Return to Previous Panel
                        Segment 1             Segment 2             Segment 3
Segment Name            : R&D

IP Configuration :
   IP Address           : 203.70.236.1        203.70.236.2          203.70.236.3
   Subnet Mask          : 255.255.255.0       255.255.255.0         255.255.255.0
   Gateway IP           : 203.70.236.254      0.0.0.0               0.0.0.0
   Serial IP            : 203.70.236.9        0.0.0.0               0.0.0.0
                        Save to EEPROM        Save to EEPROM        Save to EEPROM

IPX Frame Type          : IPX 802.2 FRAME     IPX 802.2 FRAME       IPX 802.2 FRAME
Internal IPX Network    : AC-B3-00-56         AC-B3-00-56           AC-B3-00-56


IP Protocol             : ENABLED             ENABLED               ENABLED
IPX Protocol            : DISABLED            DISABLED              DISABLED
SNMP Over Ethernet      : DISABLED            DISABLED              DISABLED

              IP configuration of segment 1 saved to EEPROM and enabled!
                     Use arrow keys to move. <Enter> to confirm.
                           <Ctrl+T> to return to Main Menu.
```

Figure 4-10 Segment Configuration Menu

Menu items are briefly described in the following table.

Field	Description
Segment Name	A name you can assign to the segment.
IP Configuration	The hub system may be run on SNMP protocol over UDP/IP transport protocol. In this environment, all systems on the Internet, such as network interconnection devices and Network Management Stations (e.g., the PC running AccView) are assigned an IP address. When accessing the hub from a remote site, you will also have to assign an IP address to the management port.
IP Address	IP address of the segment you're managing.
Subnet Mask	Subnet mask of the agent you've selected. This mask identifies the host address bits used for routing to specific subnets.
Gateway IP	Gateway used in passing trap messages from the hub agent to the management station.
Serial IP	IP address used to access the on-board configuration program via an out-of-band SLIP connection to the management port.
Save to EEPROM	This command saves the IP address for the selected segment in nonvolatile memory, and makes it effective immediately.
IPX Frame Type	The selected format used on the LAN; i.e., this type is that used by the IPX network where the hub is installed. If the specified frame type is not detected, the hub will automatically detect the current type. (Values: 802.3, Ethernet II, SNAP, 802.2)
Internal IPX Network	This address is composed of Net Number which identifies the IPX network number for the connected slot.
IP Protocol	Protocol suite selection.
IPX Protocol	Protocol suite selection.
SNMP over Ethernet	Protocol suite selection.

Table 4.9 Segment Configuration Menu

Configuring Hub Parameters

Use the *Hub Configuration* menu under the Configuration Panel to configure any hub in the stack. This menu is used to configure the repeater and management modules. Use the following menu to select the required hub, or to change the numeric identifier for any hub in stack.

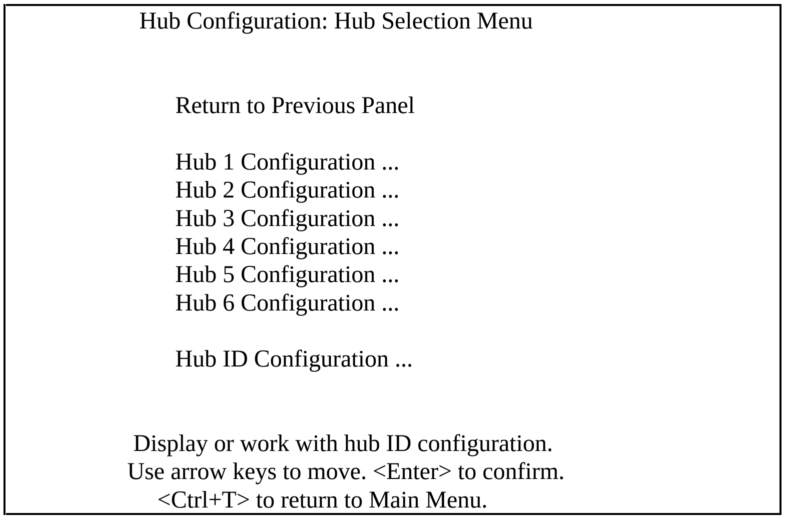

```
               Hub Configuration: Hub Selection Menu



                   Return to Previous Panel

                   Hub 1 Configuration ...
                   Hub 2 Configuration ...
                   Hub 3 Configuration ...
                   Hub 4 Configuration ...
                   Hub 5 Configuration ...
                   Hub 6 Configuration ...

                   Hub ID Configuration ...



              Display or work with hub ID configuration.
             Use arrow keys to move. <Enter> to confirm.
                 <Ctrl+T> to return to Main Menu.
```

Figure 4-11 Hub Configuration: Hub Selection Menu

Hub Configuration

To configure a hub, select it from the list shown above. The following Hub Configuration menu will appear, allowing you to set parameters for the base repeater unit or the network management module.

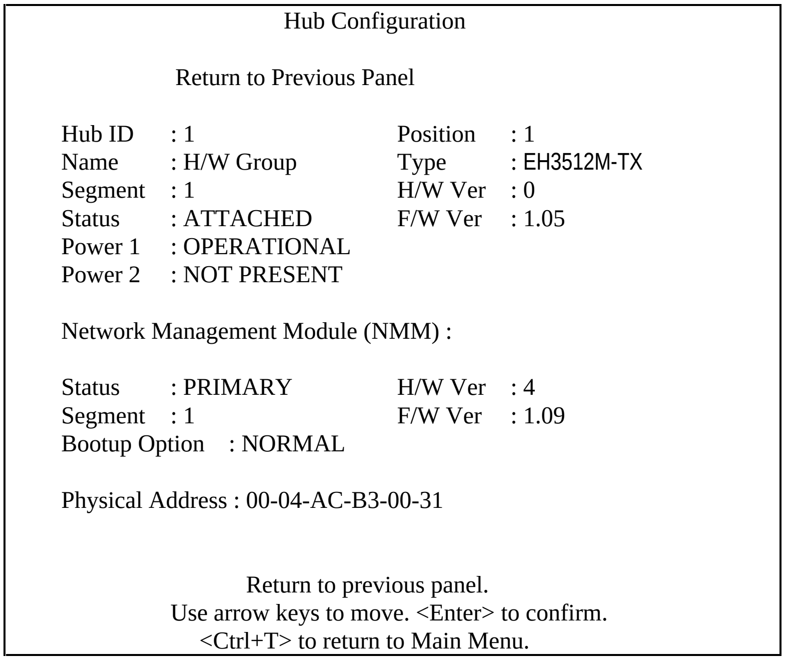

```
                          Hub Configuration

              Return to Previous Panel

    Hub ID    : 1                    Position   : 1
    Name      : H/W Group            Type       : EH3512M-TX
    Segment   : 1                    H/W Ver    : 0
    Status    : ATTACHED             F/W Ver    : 1.05
    Power 1   : OPERATIONAL
    Power 2   : NOT PRESENT

    Network Management Module (NMM) :

    Status    : PRIMARY              H/W Ver    : 4
    Segment   : 1                    F/W Ver    : 1.09
    Bootup Option    : NORMAL

    Physical Address : 00-04-AC-B3-00-31


                       Return to previous panel.
              Use arrow keys to move. <Enter> to confirm.
                  <Ctrl+T> to return to Main Menu.
```

Figure 4-12 Hub Configuration Menu

Menu items are briefly described in the following table.

Board	Field	Description
(Repeater Unit)	Hub ID	Hub identifier within the stack. (Up to 6 hubs may be connected via the FlexBus management channel.)
	Name	Any user-defined name for the selected hub.
	Status	The hub may be isolated from the backplane or attached to the backplane.
	Segment	Attach the hub to a specified segment (1 ~ 3). The segment indicator will light up to show that it has been connected to the specified stack segment.
	Power 1	Shows status of power module in Slot 1 as Operational, Not Present, or Failed.
	Power 2	Shows status of power module in Slot 2 as Operational, Not Present, or Failed.
	Position	The physical position in the stack.
	Type	Indicates hub type as EH3512I-TX or EH3512M-TX.
	H/W Ver	Indicates the current hardware version number of the repeater board.
	F/W Ver	Indicates the current firmware version number of the repeater board.
Network Management Module (NMM)	Status	Defines the status of the Network Management Module as Primary or Backup.
	Segment	The backplane segment the NMM is attached to. Note that the management agent does not have to be attached to the same segment as the repeater unit.
	Bootup Option	Specifies bootup method as - *NORMAL* - Use on-board ROM code and default IP address. *TFTP DOWNLOAD* - Get system code from TFTP server (and use default IP address). *BOOTP GET IP* - Get IP address from server (and use on-board ROM code). *BOOTP DOWNLOAD* - Get IP address and system code from server. Image is stored in temporary memory. *NO BOOTP TFTP REQUEST* - Do not issue BOOTP request. Wait for download via out-of-band. *BOOTP UPGRADE FIRMWARE* - Get IP address and system code from server. Image is stored in nonvolatile memory, and BOOTP option reset to NORMAL. Note that this is the only in-band option that places the image in nonvolatile memory.
	H/W Ver	Indicates the current hardware version number for the managment board.
	F/W Ver	Indicates the current firmware version number for the managment board.
	Physical Address	MAC address of the management agent.

Table 4.10 Hub Configuration Menu

Hub ID Configuration

To change the numeric hub identifier, select Hub ID Configuration from the Hub Configuration: Hub Selection Menu shown above. The following Hub ID Configuration menu will appear. After changing a hub identifier, verify the change with the "Enable Above Settings" command.

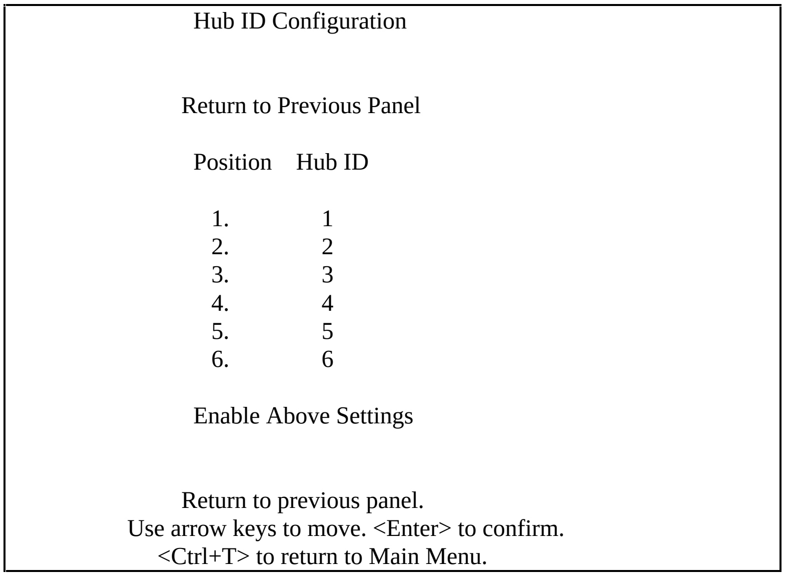

```
                 Hub ID Configuration



                Return to Previous Panel

                 Position    Hub ID

                    1.          1
                    2.          2
                    3.          3
                    4.          4
                    5.          5
                    6.          6

                 Enable Above Settings



                Return to previous panel.
          Use arrow keys to move. <Enter> to confirm.
              <Ctrl+T> to return to Main Menu.
```

Figure 4-13 Hub ID Configuration Menu

Configuring Port Parameters

Use the *Port Configuration* menu under the Configuration Panel to configure the ports for any hub in the stack. Select the port type for the required hub from the following menu.

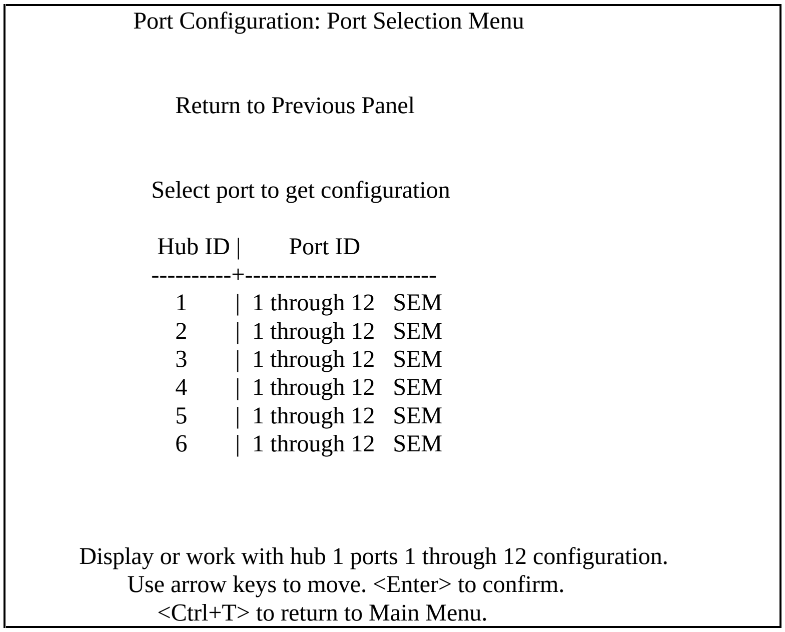

```
              Port Configuration: Port Selection Menu


                   Return to Previous Panel


                 Select port to get configuration

                  Hub ID |       Port ID
                 ----------+------------------------
                     1       |  1 through 12   SEM
                     2       |  1 through 12   SEM
                     3       |  1 through 12   SEM
                     4       |  1 through 12   SEM
                     5       |  1 through 12   SEM
                     6       |  1 through 12   SEM



         Display or work with hub 1 ports 1 through 12 configuration.
               Use arrow keys to move. <Enter> to confirm.
                   <Ctrl+T> to return to Main Menu.
```

Figure 4-14 Port Configuration: Port Selection Menu

Configuring Repeater Ports

If you select the repeater port type (i.e., 1 through 12), the *Port Configuration Menu* will open. This menu displays the ID and stack position of the selected hub, and also allows you to enable/disable any repeater port in the selected hub.

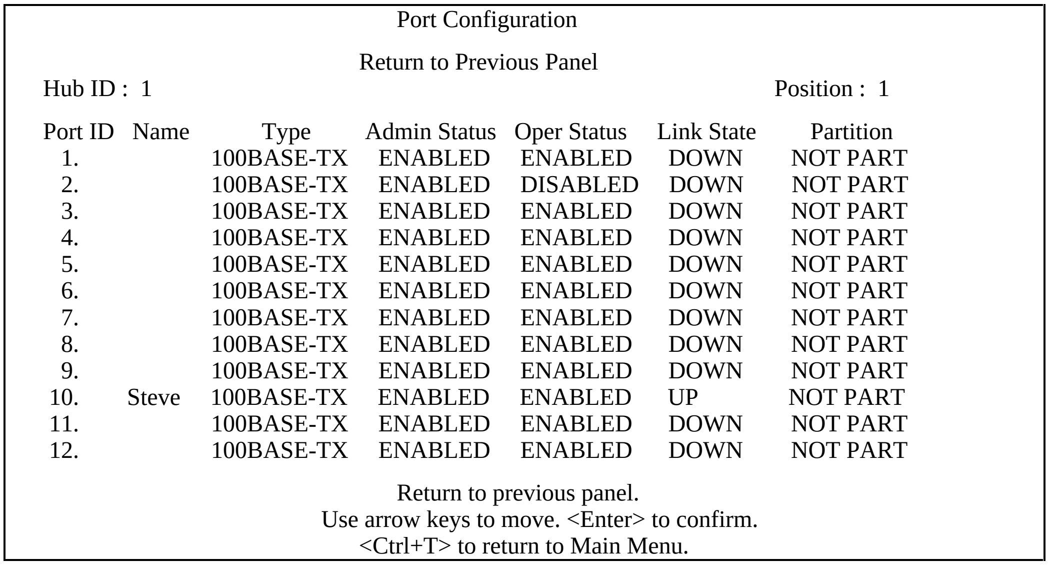

```
                              Port Configuration

                            Return to Previous Panel
Hub ID :  1                                                   Position :  1

Port ID   Name        Type      Admin Status  Oper Status  Link State    Partition
   1.              100BASE-TX    ENABLED     ENABLED      DOWN       NOT PART
   2.              100BASE-TX    ENABLED     DISABLED     DOWN       NOT PART
   3.              100BASE-TX    ENABLED     ENABLED      DOWN       NOT PART
   4.              100BASE-TX    ENABLED     ENABLED      DOWN       NOT PART
   5.              100BASE-TX    ENABLED     ENABLED      DOWN       NOT PART
   6.              100BASE-TX    ENABLED     ENABLED      DOWN       NOT PART
   7.              100BASE-TX    ENABLED     ENABLED      DOWN       NOT PART
   8.              100BASE-TX    ENABLED     ENABLED      DOWN       NOT PART
   9.              100BASE-TX    ENABLED     ENABLED      DOWN       NOT PART
  10.     Steve    100BASE-TX    ENABLED     ENABLED      UP         NOT PART
  11.              100BASE-TX    ENABLED     ENABLED      DOWN       NOT PART
  12.              100BASE-TX    ENABLED     ENABLED      DOWN       NOT PART

                              Return to previous panel.
                      Use arrow keys to move. <Enter> to confirm.
                          <Ctrl+T> to return to Main Menu.
```

Figure 4-15 Port Configuration Menu

Menu items are briefly described in the following table.

Field	Description
Hub ID	Hub identifier within the stack.
Position	The physical position in the stack (as determined by its position from the top of the FlexBus chain).
Port ID	Numeric identifier 1~12 or SEM (i.e., SmartExtender Module).
Name	User-defined name for selected port.
Type	Connection type for the repeater Ports 1~12 is 100BASE-TX.
Admin Status[1]	Any port may be set by the operator to ENABLED or DISABLED.
Oper Status[1]	Reflects the port's actual status as ENABLED or DISABLED.
Link State	Indicates if the port has a valid connection to an external device.
Partition	Indicates if the port is partitioned. (Refer to Partition/Disable Indicators in Chapter 5 for a more detailed description of the reasons a port may be partitioned.)

1 - If the port is set to ENABLED by the administrator, but used as a backup port, Admin Status and Oper Status will differ.

Table 4.11 Port Configuration Menu

Configuring the SmartExtender Module

If you select the SmartExtender Module (i.e., SEM), the *SEM Port Configuration Menu* will open. This menu allows you to configure various communication parameters for this module.

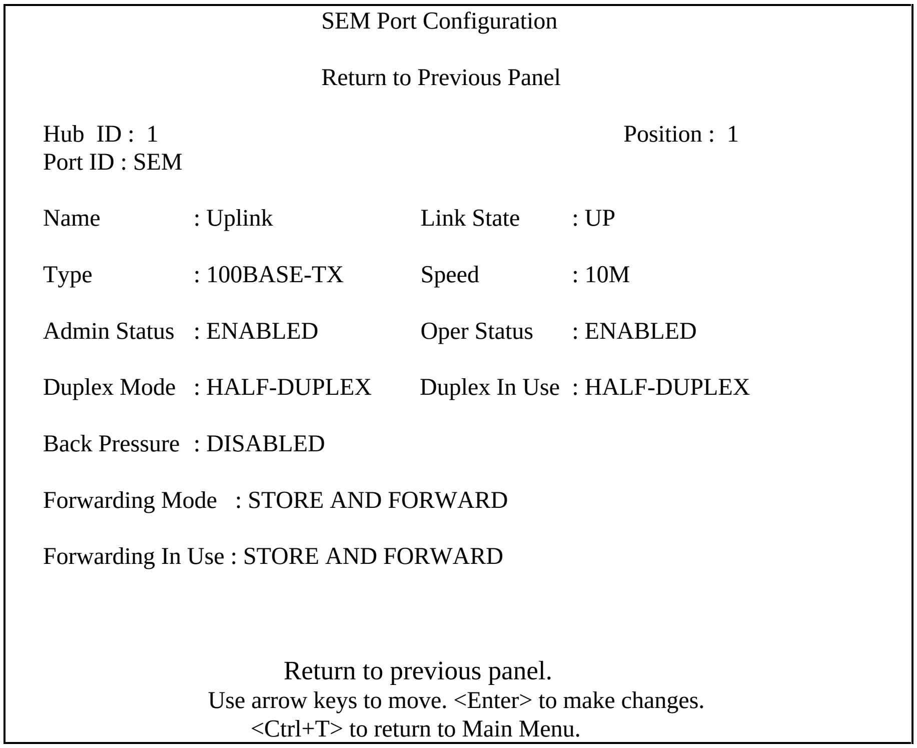

```
                         SEM Port Configuration

                         Return to Previous Panel

Hub  ID :  1                                        Position :  1
Port ID : SEM

Name           : Uplink            Link State     : UP

Type           : 100BASE-TX        Speed          : 10M

Admin Status   : ENABLED           Oper Status    : ENABLED

Duplex Mode    : HALF-DUPLEX       Duplex In Use  : HALF-DUPLEX

Back Pressure  : DISABLED

Forwarding Mode   : STORE AND FORWARD

Forwarding In Use : STORE AND FORWARD



                      Return to previous panel.
              Use arrow keys to move. <Enter> to make changes.
                  <Ctrl+T> to return to Main Menu.
```

Figure 4-16 SEM Port Configuration Menu

Menu items are briefly described in the following table.

Field	Description
Hub ID	Hub identifier within the stack.
Position	The physical position in the stack (as determined by its position from the top of the FlexBus chain).
Port ID	Identifies this port as the SmartExtender Module.
Name	User-defined name for selected port.
Link State	Indicates if the port has a valid connection to an external device.
Type	Connection types for the SmartExtender Module include 100BASE-TX (10BASE-T), 100BASE-T4, 100BASE-FX.
Speed	The 100BASE-TX module relies on auto-detection to set the speed at 10 or 100 Mbps, while the 100BASE-T4 and 100BASE-FX modules are fixed at 100 Mbps.
Admin Status[1]	Any port may be set by the operator to ENABLED or DISABLED.
Oper Status[1]	Reflects the port's actual status as ENABLED or DISABLED.
Duplex Mode	The extender module for 100BASE-TX (10BASE-T) and 100BASE-FX can be set to half or full duplex.
Duplex In Use	Displays the actual duplex mode in use based on the results of auto-negotiation.
Back Pressure	When the internal buffers on this port begin to fill, it can be configured to signal the connected device to slow transmission by setting this field to ENABLED.
Forwarding Mode	The scheme by which frames are processed and forwarded through this module can be set to Adaptive Cut-through or Store and Forward.
Forwarding In Use	Indicates the actual forwarding mode in use based on the current error rate.

1 - If the port is set to ENABLED by the administrator, but used as a backup port, Admin Status and Oper Status will differ.

Table 4.12 SEM Port Configuration Menu

Defining Backup Ports

Use the *Port Backups* menu under the Configuration Panel to define up to 6 master/slave port pairs. If the connection to the master port fails, the slave port will automatically take over. For greater reliability, primary and secondary ports should be located on different hubs. Use the following menu to specify and activate port backup pairs.

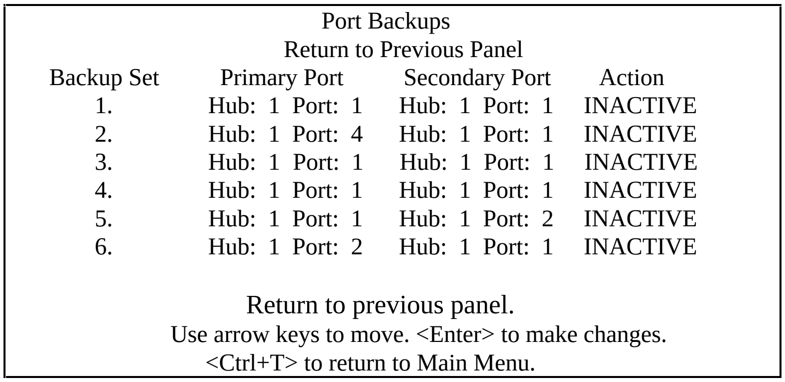

```
                              Port Backups
                         Return to Previous Panel
  Backup Set      Primary Port        Secondary Port     Action
      1.          Hub: 1 Port: 1     Hub: 1 Port: 1    INACTIVE
      2.          Hub: 1 Port: 4     Hub: 1 Port: 1    INACTIVE
      3.          Hub: 1 Port: 1     Hub: 1 Port: 1    INACTIVE
      4.          Hub: 1 Port: 1     Hub: 1 Port: 1    INACTIVE
      5.          Hub: 1 Port: 1     Hub: 1 Port: 2    INACTIVE
      6.          Hub: 1 Port: 2     Hub: 1 Port: 1    INACTIVE

                        Return to previous panel.
                Use arrow keys to move. <Enter> to make changes.
                    <Ctrl+T> to return to Main Menu.
```

Figure 4-17 Port Backups Menu

Menu items are briefly described in the following table.

Field	Description
Backup Set	Identifier for up to 18 backup port pairs.
Primary Port	Pair member serving as the primary link.
Hub	Hub ID for the master port.
Port	Port identifier for the master port.
Secondary Port	Pair member serving as the backup link.
Hub	Hub ID for the slave port.
Port	Port identifier for the slave port.
Action	Each backup pair can be set to ACTIVE or INACTIVE. BACKUP is displayed if the primary port is not currently linked. STAND-BY is displayed if the backup port is not currently linked.

Table 4.13 Port Backups Menu

Port Intrusion Control

Use the *Port Intrusion Control* menu under the Configuration Panel to restrict access for any port to an authorized source address. Select the required hub from the following menu.

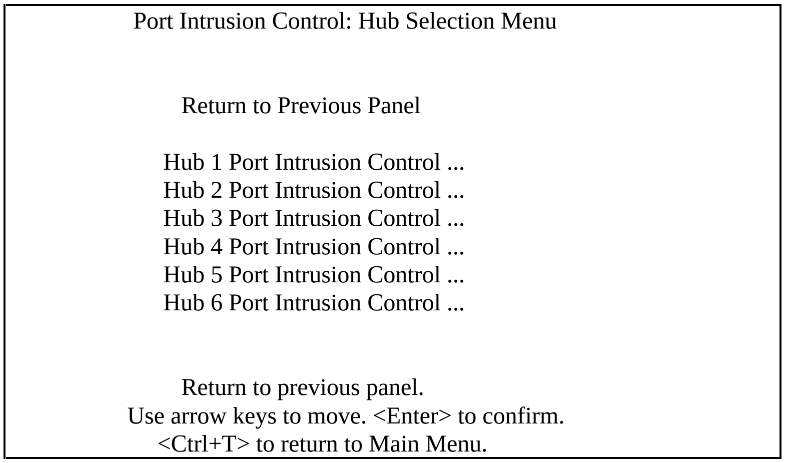

```
            Port Intrusion Control: Hub Selection Menu


                 Return to Previous Panel

               Hub 1 Port Intrusion Control ...
               Hub 2 Port Intrusion Control ...
               Hub 3 Port Intrusion Control ...
               Hub 4 Port Intrusion Control ...
               Hub 5 Port Intrusion Control ...
               Hub 6 Port Intrusion Control ...


                 Return to previous panel.
           Use arrow keys to move. <Enter> to confirm.
              <Ctrl+T> to return to Main Menu.
```

Figure 4-18 Port Intrusion Control: Hub Selection Menu

Use the *Port Intrusion Control* Menu to define the MAC address for the device authorized to access a port, and set the response type, as shown in the following example.

```
                      Port Intrusion Control

                     Return to Previous Panel

     Hub ID :  1                   Position :  1

     Port ID    Authorized Address    Intrusion Action
       1.       00-00-00-00-00-00     INACTIVE
       2.       00-00-00-00-00-00     INACTIVE
       3.       00-00-00-00-00-00     INACTIVE
       4.       00-00-00-00-00-00     INACTIVE
       5.       00-00-00-00-00-00     INACTIVE
       6.       00-00-00-00-00-00     INACTIVE
       7.       00-00-00-00-00-00     INACTIVE
       8.       00-00-00-00-00-00     INACTIVE
       9.       00-00-00-00-00-00     INACTIVE
      10.       00-00-E8-90-1B-73     WARNING & DISABLE
      11.       00-00-00-00-00-00     INACTIVE
      12.       00-00-00-00-00-00     INACTIVE

                Return to previous panel.
      Use arrow keys to move. <Enter> to make changes.
           <Ctrl+T> to return to Main Menu.
```

Figure 4-19 Port Intrusion Control Menu

Menu items are briefly described in the following table.

Field	Description
Hub ID	Hub identifier within the stack.
Position	The physical position in the stack (as determined by its position from the top of the FlexBus chain).
Port	Selects any station port (1~12) on the hub.
Authorized Address	Defines the MAC address that is authorized to attach to this port.
Intrusion Action	Response to a detected intrusion can be set to: *INACTIVE* - no action taken, *WARNING* - trap message is issued to the management station, or *WARNING & DISABLE* - trap message is issued and port is disabled. **Note:** If a port is disabled by an unauthorized intrusion attempt, it must be manually re-enabled using the Oper Status field in the Port Configuration menu.

Table 4.14 Port Intrusion Control Menu

Downloading System Software via a TFTP Server

Use the *TFTP Download* command under the Configuration Panel to download firmware updates into the hub. You may upgrade firmware from a server attached to the local network, or remotely via a serial link using TFTP over SLIP.

Specify the IP address for the TFTP server, the filename, and the download mode. The download file should be a binary file from Accton; otherwise the agent will not accept it. Also be sure that you have already set the required bootup option for the target hub under the *Hub Configuration* menu.

Download status is indicated by messages at the bottom of the screen. Firmware is first loaded into a temporary buffer. If you selected download for permanent use, it will then be transferred to nonvolatile memory. After you download the firmware, the agent will be reset and you will have to log back into the configuration program again. The following screen shows an example of the TFTP download menu.

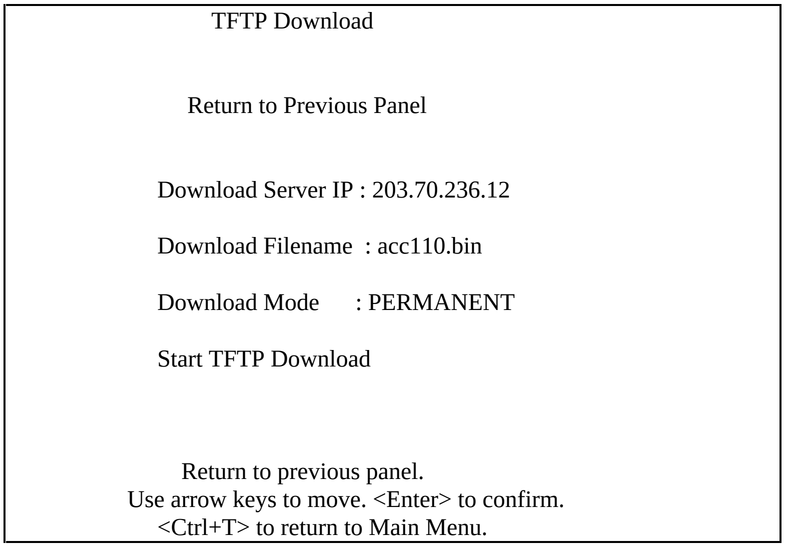

```
                 TFTP Download


               Return to Previous Panel


            Download Server IP : 203.70.236.12

            Download Filename  : acc110.bin

            Download Mode      : PERMANENT

            Start TFTP Download



               Return to previous panel.
          Use arrow keys to move. <Enter> to confirm.
            <Ctrl+T> to return to Main Menu.
```

Figure 4-20 TFTP Download Menu

Menu items are briefly described in the following table.

Field	Description
Download Server IP	IP address of a TFTP server. (TFTP stands for Trivial File Transfer Protocol.)
Download Filename	The *.bin file to download.
Download Mode	You can download to permanent flash ROM or temporary storage in RAM (for test purposes). However, if you download to temporary memory, this firmware will be lost upon power off. To update new agent firmware for permanent use, it must be downloaded to flash ROM
Start TFTP Download	Initiates download process.

Table 4.15 TFTP Download Menu

Xmodem Download

Use the *Xmodem Download* menu under the Configuration Panel to download firmware to the hub. The Xmodem protocol is used to transfer binary files over a PC connection (i.e., using terminal emulation or modem access software).

Specify the download mode and select *Process Download*. Open the file transfer utility in your terminal emulation or modem access program, specify the filename, and then start file transfer. When transferring files from you computer, be sure you specify “Send” or “Upload” file. The file should be a binary file from Accton; otherwise the agent will not accept it. Also be sure that you have already set the required bootup option for the target hub under the *Hub Configuration* menu.

File transfer status is indicated by messages at the bottom of the screen. Firmware is first loaded into a temporary buffer. If you selected download for permanent use, it will then be transferred to nonvolatile memory. After you finish transfering the firmware, the agent will be reset and you will have to log back into the configuration program again. The following screen shows an example of the Xmodem Download menu.

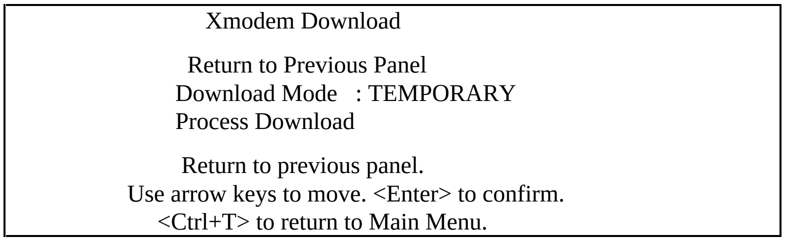

```
                    Xmodem Download

                  Return to Previous Panel
                 Download Mode   : TEMPORARY
                 Process Download

                  Return to previous panel.
           Use arrow keys to move. <Enter> to confirm.
              <Ctrl+T> to return to Main Menu.
```

Figure 4-21 Xmodem Download Menu

Menu items are briefly described in the following table.

Field	Description
Download Mode	You can download to permanent flash ROM or temporary storage in RAM (for test purposes only).
Process Download	Initiate the file transfer process.

Table 4.16 Xmodem Download Menu

Changing User Passwords

The on-board configuration program includes two fixed user types, including Admin and Guest. The access privilege is Read/Write for administrator and Read Only for guest. The default user names are "admin" and "guest," without passwords. The administrator is the only user with write access for agent parameters. You should therefore assign a password to administrator as soon as possible, and store it in a safe place. The User Passwords menu is shown below.

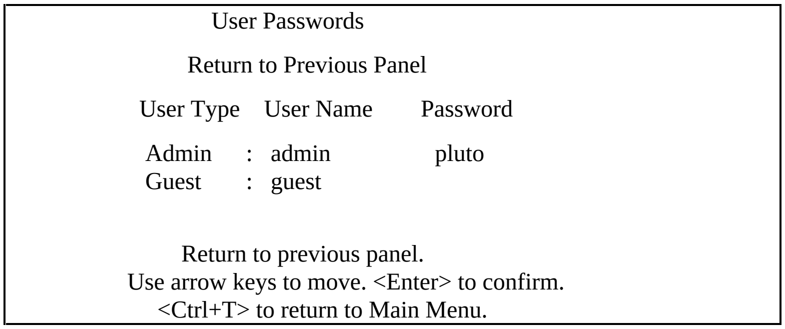

```
                     User Passwords

                 Return to Previous Panel

            User Type    User Name       Password

             Admin     :   admin              pluto
             Guest     :   guest


                 Return to previous panel.
        Use arrow keys to move. <Enter> to confirm.
           <Ctrl+T> to return to Main Menu.
```

Figure 4-22 User Passwords Menu

Menu items are briefly described in the following table.

Field	Description
User Type	There are only two fixed user types - Admin and Guest. The respective access rights are Read/Write and Read Only.
User Name	The login name required for access to the management agent. (not case sensitive)
Password	The password that must be provided with the user name to access the system. (not case sensitive)

Table 4.17 User Passwords Menu

Console Lockout

This function instructs the configuration program to automatically lock the console if no keyboard input is detected for the defined delay time. The Console Lockout menu is shown below.

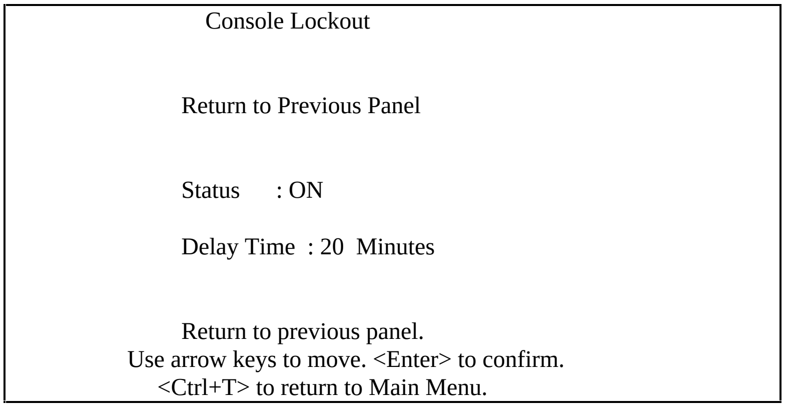

```
                    Console Lockout


                  Return to Previous Panel


                  Status      : ON

                  Delay Time  : 20  Minutes


                  Return to previous panel.
            Use arrow keys to move. <Enter> to confirm.
               <Ctrl+T> to return to Main Menu.
```

Figure 4-23 Console Lockout Menu

Menu items are briefly described in the following table.

Field	Description
Status	The console lockout feature can be turned on or off.
Delay Time	The delay time for console lockout can set for any value in the range of 0 ~ 99 minutes.

Table 4.18 Console Lockout Menu

Segment Statistics

Displays statistics for the stack's segments. These values can be used to indicate the approximate load balance in your stack. If the loading is severly unbalanced, you may consider adjusting your network connections or segment assignments. The Segment Statistics window is shown below.

Screen statistics are not automatically refreshed from the agent. Select *Refresh Statistics* to update the displayed values.

The values displayed have been accumulated since the last system reboot or counter reset.

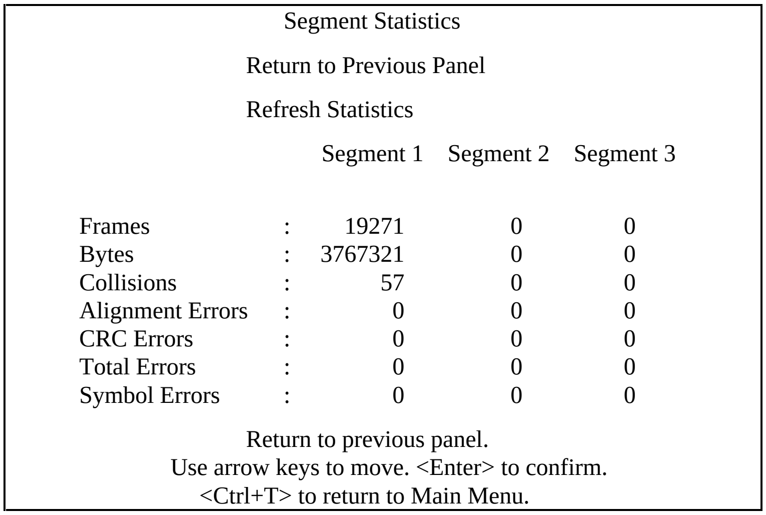

```
                          Segment Statistics

                     Return to Previous Panel

                     Refresh Statistics

                               Segment 1   Segment 2   Segment 3


  Frames             :       19271           0           0
  Bytes              :     3767321           0           0
  Collisions         :          57           0           0
  Alignment Errors   :           0           0           0
  CRC Errors         :           0           0           0
  Total Errors       :           0           0           0
  Symbol Errors      :           0           0           0

                     Return to previous panel.
             Use arrow keys to move. <Enter> to confirm.
                <Ctrl+T> to return to Main Menu.
```

Figure 4-24 Segment Statistics Window

Displayed items are briefly described in the following table.

Field	Description
Refresh Statistics	Fetch the current statistics stored in the agent's counters.
Frames	Number of frames passing through this device.
Bytes	Number of bytes passing through this device.
Collisions	Number of simultaneous node transmissions detected by this device.
Alignment Errors	Number of mis-synchronized data packets detected by this device.
CRC Errors	Number of Ethernet Cyclic Redundancy Check errors detected by this device.
Total Errors	Total number of errors, including FCS, alignment, FramesTooLong, ShortEvents, LateEvents, Jabber, and DataRateMismatches detected on this device.
Symbol Errors	Number of symbol errors (i.e., code-group errors including collision artifacts or transmission errors). Note that these errors are unique to 100 Mbps analog signals.

Table 4.19 Segment Statistics Menu

Hub Statistics

Displays statistics for any hub in the stack. Select the required hub from the following menu.

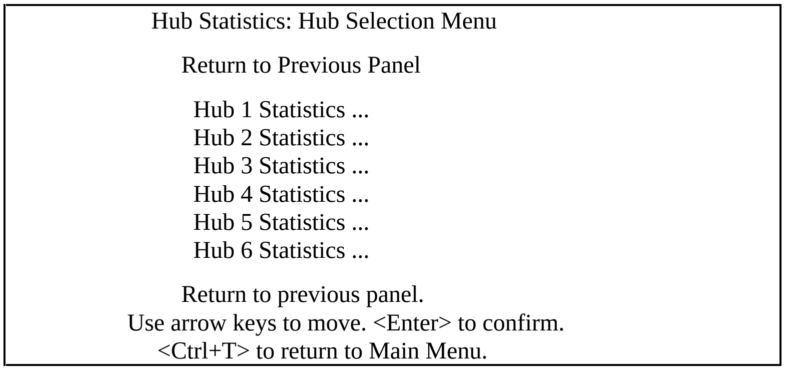

```
              Hub Statistics: Hub Selection Menu

                   Return to Previous Panel

                     Hub 1 Statistics ...
                     Hub 2 Statistics ...
                     Hub 3 Statistics ...
                     Hub 4 Statistics ...
                     Hub 5 Statistics ...
                     Hub 6 Statistics ...

                   Return to previous panel.
          Use arrow keys to move. <Enter> to confirm.
              <Ctrl+T> to return to Main Menu.
```

Figure 4-25 Hub Statistics: Hub Selection Menu

Hub statistics can be used to check on the general health of your hardware and network connections. If any of the error indications are extremely high (e.g., collisions or CRC errors), you should take appropriate measure to resolve the problem.

Screen statistics are not automatically refreshed from the agent. Select *Refresh Statistics* to update the displayed values.

The values displayed have been accumulated since the last system reboot or counter reset.

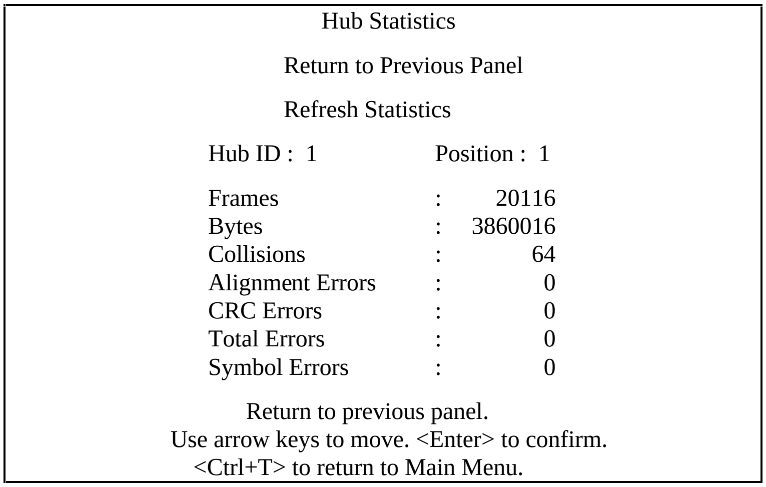

```
                          Hub Statistics

                     Return to Previous Panel

                     Refresh Statistics

              Hub ID :  1            Position :  1

              Frames               :      20116
              Bytes                :    3860016
              Collisions           :         64
              Alignment Errors     :          0
              CRC Errors           :          0
              Total Errors         :          0
              Symbol Errors        :          0

                   Return to previous panel.
          Use arrow keys to move. <Enter> to confirm.
              <Ctrl+T> to return to Main Menu.
```

Figure 4-26 Hub Statistics Window

Displayed items are briefly described in the following table.

Field	Description
Hub ID	Hub identifier within the stack.
Position	The physical position in the stack (as determined by its position from the top of the FlexBus chain).
Frames	Number of frames passing through this device.
Bytes	Number of bytes passing through this device.
Collisions	Number of simultaneous node transmissions detected by this device.
Alignment Errors	Number of mis-synchronized data packets detected by this device.
CRC Errors	Number of Ethernet Cyclic Redundancy Check errors detected by this device.
Total Errors	Total number of errors, including FCS, alignment, FramesTooLong, ShortEvents, LateEvents, Jabber, and DataRateMismatches detected on this device.
Symbol Errors	Number of symbol errors (i.e., code-group errors including collision artifacts or transmission errors). Note that these errors are unique to 100 Mbps analog signals.

Table 4.20 Hub Statistics Menu

Port Statistics

Displays statistics for any port in the stack. Select the required port from the following menu.

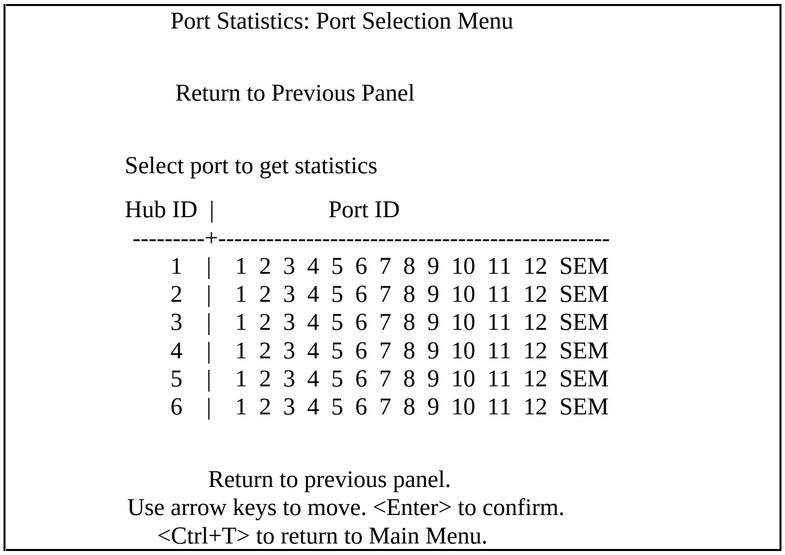

```
                 Port Statistics: Port Selection Menu


                  Return to Previous Panel


             Select port to get statistics

             Hub ID  |                Port ID
              ---------+-------------------------------------------------
                   1    |   1  2  3  4  5  6  7  8  9  10  11  12  SEM
                   2    |   1  2  3  4  5  6  7  8  9  10  11  12  SEM
                   3    |   1  2  3  4  5  6  7  8  9  10  11  12  SEM
                   4    |   1  2  3  4  5  6  7  8  9  10  11  12  SEM
                   5    |   1  2  3  4  5  6  7  8  9  10  11  12  SEM
                   6    |   1  2  3  4  5  6  7  8  9  10  11  12  SEM


                     Return to previous panel.
             Use arrow keys to move. <Enter> to confirm.
                <Ctrl+T> to return to Main Menu.
```

Figure 4-27 Port Statistics: Port Selection Menu

Statistics for Repeater Ports

Statistics for repeater ports covers a wide range of Ethernet variables. If any of the error indications are extremely high, there may be a problem with the port, the attached device, or the network cabling. (The System Diagnostics section in Appendix A provides help on troubleshooting.) The Port Statistics window is shown below.

Screen statistics are not automatically refreshed from the agent. Select *Refresh Statistics* to update the displayed values.

The values displayed have been accumulated since the last system reboot or counter reset.

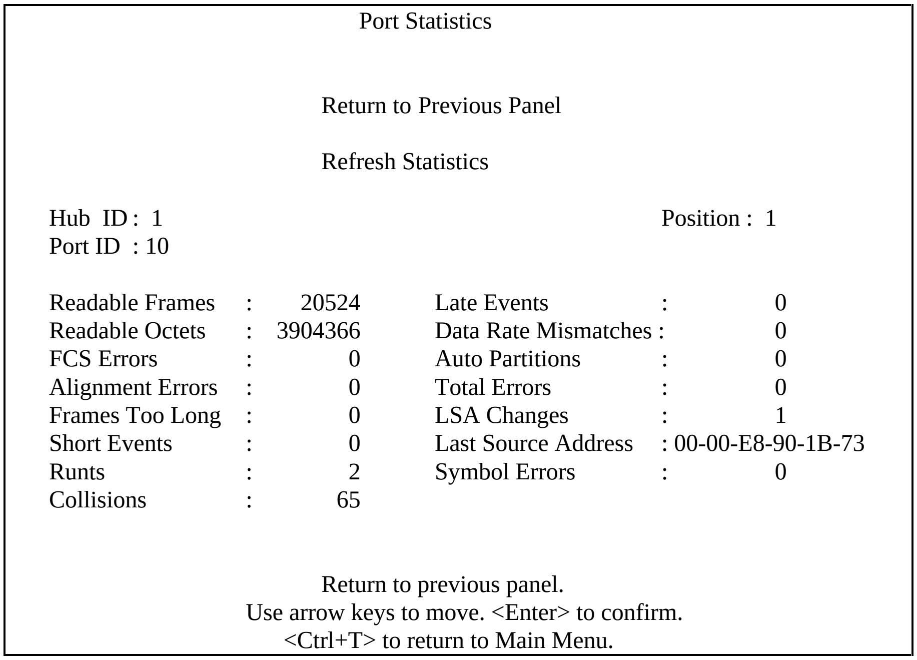

```
                              Port Statistics


                         Return to Previous Panel

                         Refresh Statistics

Hub  ID :  1                                          Position :  1
Port ID  : 10

Readable Frames    :     20524     Late Events          :          0
Readable Octets    :   3904366     Data Rate Mismatches :          0
FCS Errors         :         0     Auto Partitions      :          0
Alignment Errors   :         0     Total Errors         :          0
Frames Too Long    :         0     LSA Changes          :          1
Short Events       :         0     Last Source Address  : 00-00-E8-90-1B-73
Runts              :         2     Symbol Errors        :          0
Collisions         :        65


                         Return to previous panel.
                 Use arrow keys to move. <Enter> to confirm.
                    <Ctrl+T> to return to Main Menu.
```

Figure 4-28 Port Statistics Menu

Displayed items are briefly described in the following table.

Field	Description
Hub ID	Hub identifier within the stack.
Position	The physical position in the stack (as determined by its position from the top of the FlexBus chain).
Port ID	Port identifier on the hub.
Readable Frames	Number of good frames received.
Readable Octets	Number of good octets received.
FCS Errors	Number of Frame Control Sequence errors.
Alignment Errors	Number of mis-synchronized data packets detected by this device.
Frames Too Long	Number of times frame length has exceeded the maximum allowable size (i.e., 1518 bytes).
Short Events	Number of short fragments.
Runts	Number of fragments (that were too long to qualify as short events).
Collisions	Number of simultaneous node transmissions detected by this device.
Late Events	Number of frames where a collision occurred late in the transmission.
Data Rate Mis.	Number of frames for which the data rate does not match the local frequency.
Auto Partitions	Number of times this port has been automatically partitioned due to jabber.
Total Errors	Total number of errors, including FCS, alignment, FramesTooLong, ShortEvents, LateEvents, Jabber, and DataRateMismatches detected on this device.
LSA Changes	Number of times the source address has changed.
Last Source Addr.	Last source address.
Symbol Errors	Number of symbol errors (i.e., code-group errors including collision artifacts or transmission errors). Note that these errors are unique to 100 Mbps analog signals.

Table 4.21 Port Statistics Menu

Statistics for SmartExtender Module

Statistics for the SmartExtender Module includes the basic Ethernet variables shown below.

Screen statistics are not automatically refreshed from the agent. Select *Refresh Statistics* to update the displayed values.

The values displayed have been accumulated since the last system reboot or counter reset.

```
                         SEM Port Statistics

                         Return to Previous Panel

                         Refresh Statistics

 Hub  ID :  1                                          Position :  1
 Port ID : SEM

 In Frames         :    4265954      FCS Errors        :         52
 In Octets         :  842532471      Frames Too Long   :          0
 In Discarded      :     744817      Runts             :         33
 Out Frames        :      24808      Collisions        :      11678
 Out Octets        :    4432038
 Out Discarded     :       1202


                        Return to previous panel.
                Use arrow keys to move. <Enter> to confirm.
                   <Ctrl+T> to return to Main Menu.
```

Figure 4-29 SEM Port Statistics Menu

Displayed items are briefly described in the following table.

Field	Description
Hub ID	Hub identifier within the stack.
Position	The physical position in the stack (as determined by its position from the top of the FlexBus chain).
Port ID	Port identifier on the hub.
In Frames	Number of frames received.
In Octets	Number of octets received.
In Discarded	Number of frames received and filtered.
Out Frames	Number of frames transmitted.
Out Octets	Number of octets transmitted.
Out Discarded	Number of frames transmitted and filtered (i.e., at the repeater to SEM interface).
FCS Errors	Number of Frame Control Sequence errors.
Frames Too Long	Number of times frame length has exceeded the maximum allowable size (i.e., 1518 bytes)
Runts	Number of fragments (that were too long to qualify as short events).
Collisions	Number of simultaneous node transmissions detected by this device.

Table 4.22 SEM Port Statistics Menu